life.augmented

All you need… to drive

SPC56
32-bit Power Architecture® MCUs

Content

Introduction 3
SPC56 family architectures 4
SPC56 B-, C-, D-Line 5
SPC56 P-, L-Line 7
SPC56 M-, A-Line 9
Data security 11
Functional safety 12
Family lines overview 13
SPC56 Leading portfolio 14

SPC56 development tools 15
Developments tools and providers 16
HardwareTools 16
SPC5Studio 19
Software Library 20

SPC56 applications 21
Powertrain 21
Chassis and Safety 30
Body and Convenience 35
Transportation 40
Industrial 43

Device Summary 46
Ordering Information 48
Hardware Tools Summary 49

Introduction

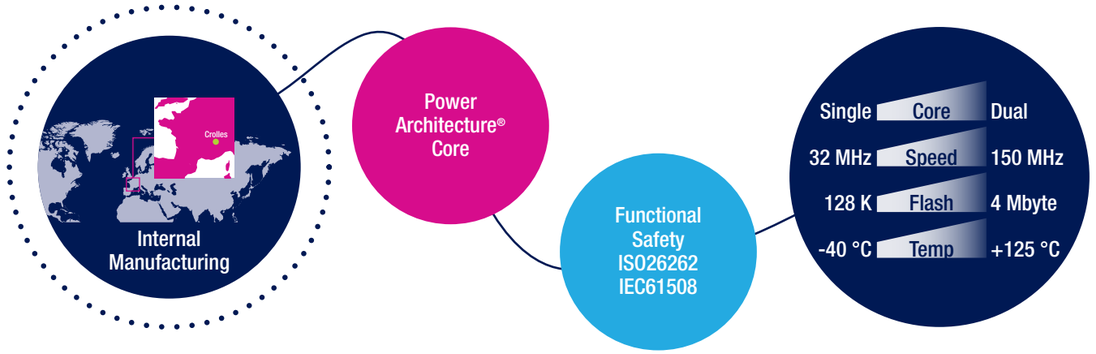

32-bit Power Architecture® MCUs for Automotive

The SPC56 family, built on the renowned Power Architecture® technology, provides a wide range of cores, peripherals, memory and package options offering a large variety of automotive and safety-oriented solutions. ST's SPC56 B, C, D, P, L, M, and A lines are the 7 pillars of the SPC56 Automotive grade family. State-of-the-art technology, with unmatched modularity and compatibility combined with high-performance cores and tailor-made peripherals, makes this family the perfect platform solution, to optimize system cost and performance.
From product specification, through design and manufacturing, the focus is on reliability, application robustness and safety.

THE "AUTOMOTIVE" ADVANTAGE

- Full performance up to 125°C
- Product longevity
- Outstanding product quality
- Guaranteed performance at high/low temperatures

INTERNAL MANUFACTURING FOR SUPPLY ASSURANCE

- Designed on standard automotive power architecture
- ST proprietary in-house front and backend manufacturing capability

PERFORMANCE SCALABILITY

- Single or Dual core devices
- e200z0 to z4 Power Architecture® cores
- 32 to 150 MHz core speed
- Flash memory from 128 Kbytes to 4 Mbytes

DESIGNED FOR SAFE APPLICATION

- Memory with ECC
- Support for al ASIL levels defined in ISO26262 framework approach for safety up to ASIL D.
- Dual core with both Lock Step (LSM) and Decoupled Parallel (DPM) modes

SECURITY

Cryptography Services Engine (CSE)

MARKET STANDARD POWER ARCHITECTURE

- High-performance peripherals
- Up to 12-bit ADC
- True 3.3 to 5 V Inputs/Outputs
- CAN, LIN, FlexRay and Ethernet connectivity

LOW COST OF OWNERSHIP

- Emulation/debugging using IEEE standards
- Free development environment and code generator
- Low cost compiler and debugger

SPC56 Family architecture

The SPC56 family, of 32-bit MCUs, is based on the e200 series of Power Architecture® cores. Developed to satisfy the different requirements for automotive applications, it provides a variety of processing power and peripherals. For this reason, the SPC56 family ranges from code-efficient e200z0 single-core, to e200z4d dual-issue cores for applications requiring higher processing capabilities.
However, since all devices share the same instruction set and the same main architectural features, porting an application from a device to another is a low effort activity. Beyond the MCU core, even though designed with automotive applications in mind, the SPC56 family can provide efficient solutions for almost all transportation and highly demanding industrial applications.

Core	e200zo	e200z3	e200z4d
Pipeline	4	4	5
Issue (instructions/cycle)	Single	Single	Dual
MMU	-	8 pages	16 pages
CPU cache	-	-	Instructions + Data
CPU MHz range	32 to 80 MHz	80 MHz	Up to150 MHz

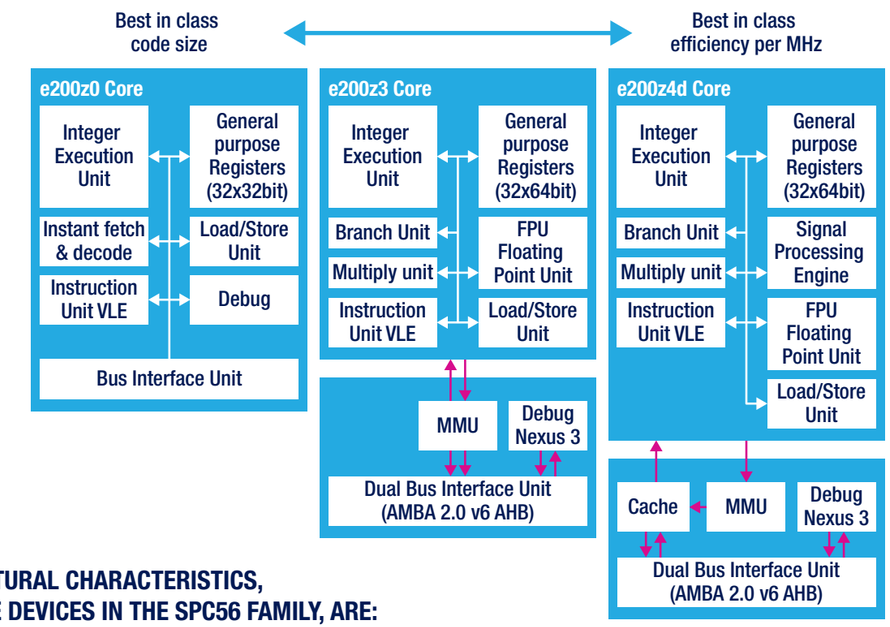

THE MAIN ARCHITECTURAL CHARACTERISTICS, COMMON TO ALL THE DEVICES IN THE SPC56 FAMILY, ARE:

- The crossbar switch with advanced microcontroller bus architecture enabling multi-master capability.
- The enhanced DMA controller.
- The interrupt controller with a unique 9-bit vector address for each interrupts source, and supporting up to 475 interrupts. It also supports 8 software-configurable interrupt sources with 16 different priorities, as well as pre-emptive prioritized interrupt requests to the microcontroller.
- The system integration unit that includes a centralized GPIO control, a pad configuration control and a system reset generation and monitoring system.
- The Boot-assist module, from power-on reset to the user code stored in Flash. This system offers a censorship protection for customer Flash memory sectors, as well as the detection of user boot code in Flash using a valid signature.

SPC56 B-, C-, D-Line

SPC56 B-Line, SPC56 C-Line, SPC56 D-Line

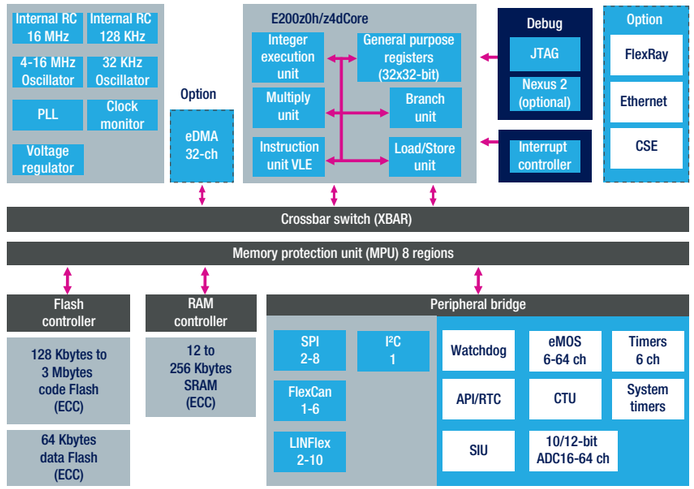

APPLICATIONS

- Body control module (BCM)
- Smart junction box
- Comfort module
- Gateway
- Security/Access
- Door module
- Seat module with sensor-less positioning
- LED lighting

STMicroelectronics SPC56 B-Line, C-Line and D-Line are dedicated to the specific needs of body and convenience applications with a focus on networking and security. Their architecture's unique modularity and scalability provides compatible devices covering the wide spectrum of body applications with tailored peripherals, optimum cost and performance trade-offs.

KEY BENEFITS

Lighting Module Support

A module dedicated to the control of car lighting provides real-time diagnostic feedback for 100% of the loads. It extends the capability of existing systems as each channel can be configured on the fly through software for incandescent lamps and LEDs.

Power Management

A sophisticated low-power management allows for a quantum leap in power saving, avoiding the use of a secondary microcontroller.
The low-power and wake-up concepts support LIN and CAN communication from standby mode. STOP Mode supports Pretended Networking, with consumption less then 4 mA.

Data Security

The Cryptographic Services Engine (CSE) available on SPC564B/EC products, compliant to security standards SHE and EVITA light, grants the maximum level of data security.

Improved time to market

- Standard core for maximum reuse
- Designed for AUTOSAR
- Memory/pin-out/performance scalability
- Compatibility of product family

Reduced system cost

- Lighting module with diagnostics
- EEPROM emulation support
- Improved EMI
- Innovative power management concept
- Dual on-chip RC oscillators

Power and robustness

- z0h - z4d Power Architecture® dual-core- options
- ECC on all memories
- Memory/register protection functions
- Clock security system/backup oscillator
- CPU clock independent watchdog
- Injection robust I/Os

Focus on quality

- Zero defects strategy from design to production
- Internal manufacturing for supply assurance
- Latest 90 nm automotive-focused technology

LINES KEY FEATURES

D-Line

Base element of the family that addresses automotive applications migrating from an 8-bit to 32-bit solution.

- Core z0h - 48 MHz
- Code 128 to 256 Kbytes Flash memory
- Data 64 Kbytes data Flash memory
- RAM 12 to 16 Kbytes SRAM
- Timer eMIOS, 16-bit counter timed I/O units
- Other PWM, 16-ch. eDMA
- Comm. Up to 2xSPI, 3xLIN, 1xCAN
- ADC 12-bit
- Package 64 - 100 pins

B-Line

Dedicated to the specific needs of body and convenience applications. It offers excellent interfacing and a solution for real-time car lights, generic load diagnostics and low-power standby mode with fast wake-up capability

- Core z0h - 64 MHz or z4d - 120 MHz
- Code 256 Kbytes to 3 Mbytes Flash memory
- Data 64 Kbytes data Flash memory
- RAM 24 to 192 Kbytes SRAM
- Timer eMIOS, 16-bit counter timed I/O units
- Other PWM, 32-ch. eDMA, CSE
- Other MPU, DMA
- Comm. Up to 8xSPI, 10xLIN, 6xCAN, I2C, FlexRay, Ethernet
- ADC 10-bit or dual 10/12-bit
- Package 64 - 208 pins

C-Line

Dedicated to the specific needs of gateway applications that require connections to multiple in-vehicle networks supporting various protocols

- Core z0h - 64 MHz or dual-core z0h+z4d up to 120 MHz
- Code 256 Kbytes to 3 Mbytes Flash memory
- Data 64 Kbytes data Flash memory
- RAM 32 to 256 Kbytes SRAM
- Timer eMIOS, 16-bit counter timed I/O units
- Other MPU, PWM, 32-ch. eDMA, CSE
- Comm. Up to 8xSPI, 12xLIN, 6xCAN, I2C, FlexRay, Ethernet
- ADC 10-bit or dual 10/12-bit
- Package 100 - 256 pins

SPC56 P-, L-Line

SPC56 P-Line and SPC56 L-Line

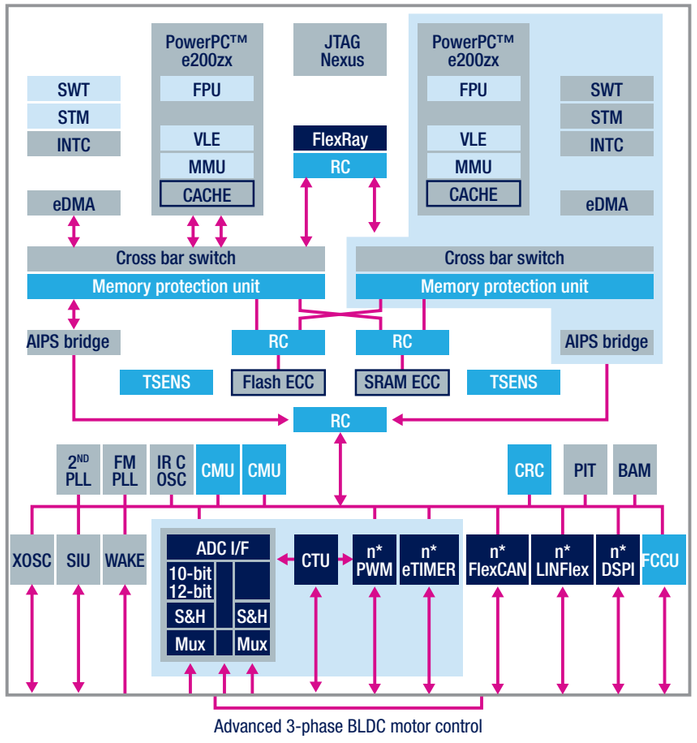

APPLICATIONS

- ABS & ESC
- Active suspension
- Electronic power steering
- Airbags systems
- Safety domain controller
- Braking systems
- Driver assistance
- Advanced motor control

STMicroelectronics SPC56 P-Line and SPC56 L-Line are dedicated to the specific needs of chassis and safety applications, with specific focus on functional safety and advanced three-phase motor control. The unique modularity and scalability of the architecture and the single and dual core solutions cover the wide range of chassis and safety applications.

KEY BENEFITS

Efficient and safe processing of application data

- High-performance, 32-bit Power Architecture® cores: SPC56 P-Line e200z0h with VLE for best code efficiency SPC56 L-Line, e200z4d dual issue, cache memory, DSP and vector floating point.
- The SPC56 P-line offers low-cost functional safety addressing ASIL-B requirements and variants providing optimized peripherals for electric motor control & airbag systems.
- The SPC56 L-line is an enhanced solution with increased safety implementations such as dual-core architecture working both in Lock Step and Decoupled Parallel modes addressing ISO 26262 requirements. Its safety concept, based on hardware implementation, offers a certified ASIL-D turnkey solution easily extensible to SIL3 compliance.

Improved time to market

- Compatibility across families through modular peripheral sets
- AUTOSAR compliant, maximizing software and tools reuse
- Memory/pin-out/performance scalability
- SPC56EL proven safety integrity

Reduced system cost

- SPC56 L functional safety turnkey SIL3/ASILD solution based on HW measures – no need for external MCU
- Field-oriented three-phase control for best efficiency and EMI performance
- Sensor-less implementation supported with dedicated library and 32-bit processing performance

Focus on quality

- Zero defects strategy from design to production
- Internal manufacturing for supply assurance
- Latest 90 nm automotive-focused technology

LINES KEY FEATURES

SPC56 P

P-Line

Flexible cost-competitive solution to cover a wide range of motor-control and safety-oriented applications.
Key functions including an advanced timer with programmable cross triggering unit for easy development of real-time, sensor-less field-oriented control solutions and airbag applications

- Core z0h - 64 MHz or z0h+z0h - 64 MHz dual-core
- Code 192 Kbytes to 1 Mbytes Flash
- Data 64 Kbytes data Flash
- RAM 12 to 80 Kbytes SRAM
- Comm. Up to 5xSPI, 2xLIN, 3xCAN, FlexRay
- ADC dual 10-bit
- Package 64 - 144 pins

SPC56 L

L-Line

Designed to cover a wide range of automotive applications that must meet ISO 26262 standards, up to the most stringent ASIL-D level with a single MCU. Key safety features include lock-step mode, crossbar, eDMA, MPU, temperature sensors, centralized fault collection and control unit, built-in logic and memory self-test, CRC unit, ECC protected memories, voltages and clock-failure detection

- Core z4h - 120 MHz or z4d+z4h - 120 MHz dual-core
- Code 768 Kbytes to 2 Mbytes Flash memory
- Data 64 Kbytes data Flash memory
- RAM 96 to 192 Kbytes SRAM
- Other Lock Step and Decoupled Parallel modes
- Comm. Up to 3xSPI, 2xLIN, 3xCAN, FlexRay
- ADC dual 12-bit
- Package 100 - 144 pins

SPC56 A-, M-Line

SPC56 M-Line and SPC56 A-Line

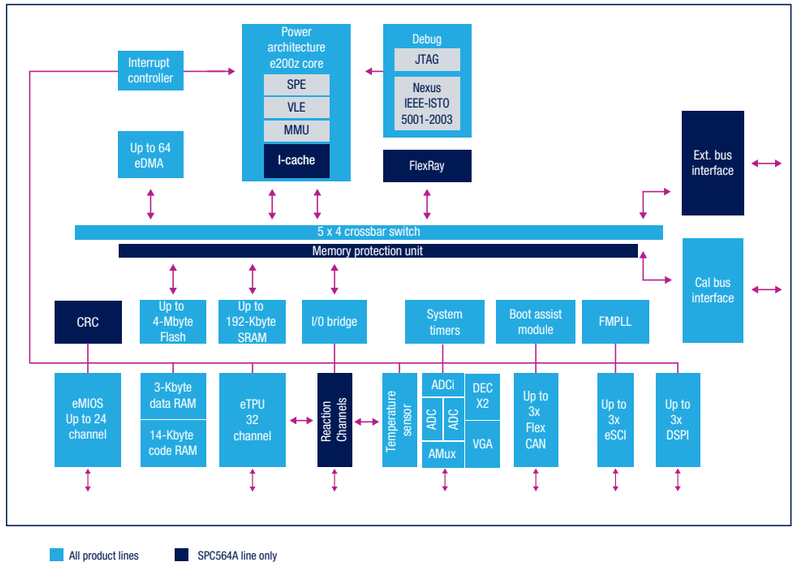

APPLICATIONS

- ABS & ESC
- Active suspension
- Electronic power steering
- Airbags systems
- Safety domain controller
- Braking systems
- Driver assistance
- Advanced motor control

SPC56 M-Line and SPC56 A-Line are dedicated to the specific needs of high-performance time processing applications such as mid-range engine propulsion control and automotive transmission. The MCUs family offers an enhanced high-performance time processing unit (eTPU) with DSP capability.

KEY BENEFITS

eTPU2

Enhanced co-processor designed for timing control. Operating in parallel with the host CPU, the eTPU2 processes instructions and real-time input events, performs output waveform generation and accesses shared data without host intervention. Consequently, for each timer event, the host CPU setup and service times are minimized or eliminated. A powerful timer subsystem is formed by combining the eTPU2 with its own instruction and data RAM. ST's high-level assembler/compiler library allows customers to develop their own functions on the eTPU2.

Tight emission control

- High-performance cores integrating digital-signal processing and vector floating-point computation for the SPC563M product lines, in addition to cache memory and dual-issue pipeline for the SPC564A line.
- Dual ADCs with variable-gain input amplifier and decimation filter allowing knock detection integration.

Improved time to market

- Compatibility across families through modular peripheral sets
- AUTOSAR compliant, maximizing software and tools reuse
- Memory/pin-out/performance scalability

Reduced system cost

- Very high I/O availability in QFP packages
- Innovative calibration concept and tools support
- Requires only one linear 5 V voltage regulator (SPC563M family)
- On-chip integration of CRC unit and FlexRay controller (SPC564A family)

Focus on quality

- Zero defects strategy from design to production
- Internal manufacturing for supply assurance
- Latest 90 nm automotive-focused technology

LINES KEY FEATURES

M-Line

Entry level for engine propulsion control and automotive transmission control applications.
High performance time processing unit (eTPU) with DSP capability.

- Core z3 - 80 MHz
- Code 1 to 1.5 Mbytes Flash memory
- RAM 64 to 94 Kbytes SRAM
- Comm. Up to 2xSPI, 2xLIN, 2xCAN
- ADC dual 12-bit
- Package 144 - 176 pins

A-Line

Dedicated to specific needs of propulsion control and transmission control applications. High performance time processing unit (eTPU) with DSP capability

- Core z4d - 150 MHz
- Code 2 to 4 Mbytes Flash memory
- RAM 128 to 192 Kbytes SRAM
- Other Lock Step and Decoupled Parallel modes
- Comm. Up to 3xSPI, 3xLIN, 3xCAN, FlexRay
- ADC dual 12-bit
- Package 176 - 324 pins

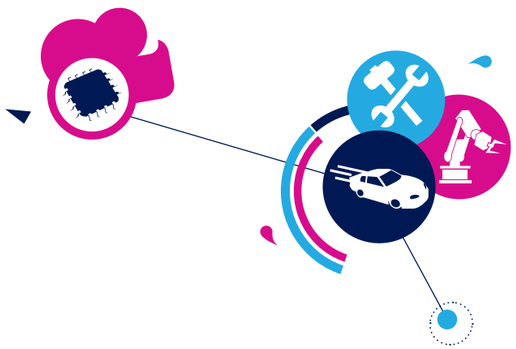

SPC56 Data security

Each day, the automotive ecosystem is exposed to more security risks due to the increased number of electronic components in the car and to the fact that cars are becoming even more interconnected: Wi-Fi hot-spot access, car-to-infrastructure and car-to-car (Wi-Fi/cellular)

To prevent security incidents, ST implemented a strategy to ensure system integrity, proven identity and data confidentiality; called Secure Zone.

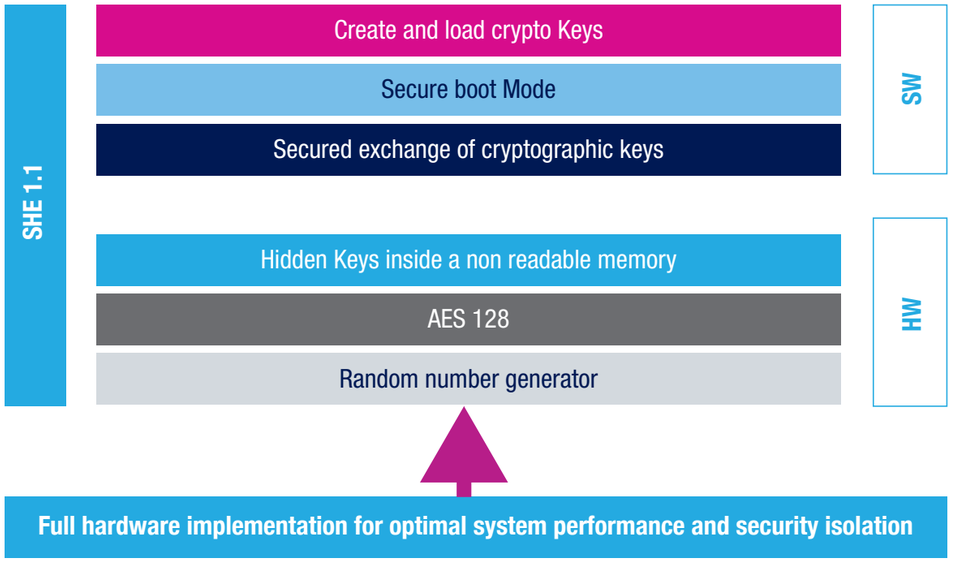

The implementation approach, based on Data Cryptography, can be performed at the software level on every SPC56 MCU product. However, the maximum level of security can be achieved using a hardware approach, with the Cryptographic Services Engine (CSE) available on all SPC564B/EC products, and is compliant with SHE and EVITA light security standards.

TO FACILITATE THE WORK OF CUSTOMERS IN DEVELOPING THEIR SECURITY CODE, THE BASIC SOFTWARE COMPONENTS ARE AVAILABLE.

- The SPC56 Software Cryptography Library, or **"CSE Support and SW Library Components"**, provides an exhaustive set of software algorithms and ready-to-use examples for symmetric and asymmetric Encryption/Decryption, message authentication and Random Number Generation. It is a SPC5Studio Eclipse plug-in, available for free download on my.ST.com
- A complete set of software drivers, known as **"CSE Driver Component"** are available as part of the SPC5Studio suite also downloadable through the update procedure.
  It offers, on SPC564B/EC MCU's, AES-128 ECB/CBC encryption/decryption, CMAC message authentication, key access lock/unlock, secure key loading/update and random number generation; all implemented by a dedicated hardware peripheral (CSE accelerator) to guarantee minimum CPU load and maximum security.

SPC56 Functional safety

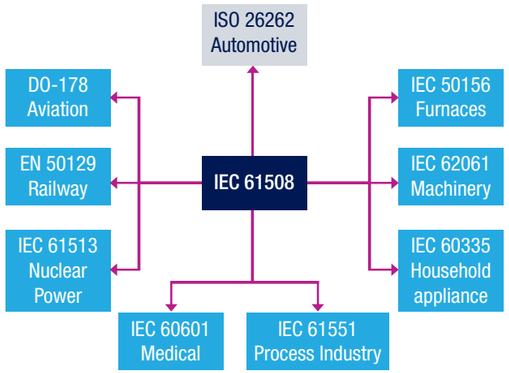

The choice of products and solutions for real-time critical systems, both in automotive and industrial applications, cannot escape from the growing request of functional safety and a facilitated achievement of the desired safety integrity level.

The IEC 61508 standard (or its specific application field adaptation including the automotive standard ISO 26262), defines functional safety for any equipment applicable throughout the lifecycle of all electronic and electrical safety-related systems.

It is a risk-based safety standard requiring a quantitative risk assessment (taking into account the severity of potential injury and the probability of its occurrence) and a consequent risk reduction through the definition of appropriate safety functions (avoiding, controlling or mitigating the risk effects).

The safety functions are usually implemented through a single system or with a set of subsystems when there are critical parts whose failing would cause a failure of the safety function. The level of risk-reduction, provided or required by a safety function, is specific to the standard and is mainly characterized by the Probability of Dangerous Failure per Hour (PFHD). The Safety Integrity Level (SIL), used for industrial applications, ranges from 1 to 4, while the Automotive Safety Integrity Level (ASIL), used for automotive applications, ranges from A to D. The table shows a general correspondence between the two standards.

SIL	ASIL	PFH_D
4	-	$<10^{-8}$
3	D	$^{3}10^{-8}\ldots<10^{-7}$
2	B/C	$^{3}10^{-7}\ldots<10^{-6}$
1	A	$^{3}10^{-6}\ldots<10^{-5}$

SAFETY COMPLIANCE AND COST SAVINGS WITH THE RIGHT IC SELECTION

Requiring safety integrity level compliance for ICs in isolation, in addition to the safety integrity level for the module or system, might lead to the design of extra diagnosis features which will increase cost, without improving safety.

For this reason, all ICs selected for a specific safety function implementation requires safety integrity level compliance only when it is a subsystem of the safety function and in this case it requires the same safety integrity level of the safety function. In the other case, it just requires the availability of the Mean Time Between Failures and the Safe Failure Fraction (SFF), for the calculation of the safety integrity level of the system or subsystem in which is used.

ST help customers make the right choice through the different scenarios and provide the best solution when a either safety-certified or safety-ready device is required and in both cases supply all the required safety documents (for example certification, FMEDA, etc.). The SPC56 family provide the right device to simplify the implementation of customer applications with the desired functional safety level compliance, even for the demanding ASIL D or SIL 3 levels.

For example, if two MCUs are required for fail-safe operation, with one monitoring the other, today, a single SPC5 dual-core MCU, such as the SPC56 L-line, offers the possibility to run the two cores simultaneously in fail-safe mode. This means a single MCU can offer dual-core lock-step operation, with one core operating as the redundant fail-safe for the other. This type of device permits applications to attain ASIL-D / SIL3 compliancy with a single MCU, offering substantial system development and certification cost savings.

SPC56 Family lines overview

SPC56 D

D-Line

- Base element of the family that addresses automotive applications migrating from an 8-bit to 32-bit solution
- Combines small package and memory footprints with features such as 12-bit ADCs
- Based on the e200z0h core operating at up to 48 MHz, it offers a Flash memory from 128 to 256 Kbytes

SPC56 B

B-Line

- Dedicated to the specific needs of body and convenience applications
- Offers excellent interfacing and a solution for real-time car lights, generic load diagnostics and low-power standby mode with fast wake-up capability
- Ranging from e200z0h to e200z4d cores, operating at up to 64 MHz and 120 MHz respectively with Flash memory from 256 Kbytes to 3 Mbytes and an optional Cryptography Services Engine

SPC56 C

C-Line

- Dedicated to the specific needs of gateway applications that require connections to multiple in-vehicle networks supporting various protocols from LIN, SPI, UART, CAN to FlexRay and Ethernet
- Ranging from z0h single-core to z0h+z4d dual-core, operating at up to 64 MHz and 120 MHz respectively with Flash memory from 256 Kbytes to 3 Mbytes and an optional Cryptography Services Engine

SPC56 P

P-Line

- Flexible cost-competitive solution to cover a wide range of motor control and safety oriented applications
- Key functions including an advanced timer with programmable cross triggering unit for easy development of real-time, sensor-less field-oriented control solutions and airbag applications
- Ranging from e200z0h single-core to z0h+z0h dual-core, operating at up to 64 MHz, from 192 Kbytes to 1 Mbytes flash

SPC56 L

L-Line

- Designed to cover a wide range of automotive applications that must meet ISO 26262 standards up to the most stringent ASIL-D level with a single MCU
- Key safety features include lock-step mode, crossbar, eDMA, MPU, temperature sensors, centralized fault collection and control unit, built-in logic and memory self-test, CRC unit, ECC protected memories, voltages and clock-failure detection
- Ranging from single- to dual- e200z4d core up to 120 MHz, with Flash memory from 768 Kbytes to 2 Mbytes

SPC56 M

M-Line

- Entry level for engine propulsion control and automotive transmission control applications
- High performance time processing unit (eTPU) with DSP capability
- Based on an e200z3 core @80 MHz, with Flash memory from 1 to 1.5 Mbytes

SPC56 A

A-Line

- Dedicated to the specific needs of propulsion control and transmission control applications
- Offering high performance time processing unit (eTPU) with DSP capability
- Based on an e200z4d core @150 MHz, with Flash memory from 2 to 4 Mbytes

RPC5

RobuST Line

- Traceability and part marking dedicated to Aerospace & Defense
- 32 bit MCU selected for RobuST application are marked as RPC56 and offer solutions for safety (ASIL-D), security (Cryptography), motor control and powertrain applications
- Extended life time and Product Change Notification process
- Extended screening capability on request

SPC56 Leading portfolio

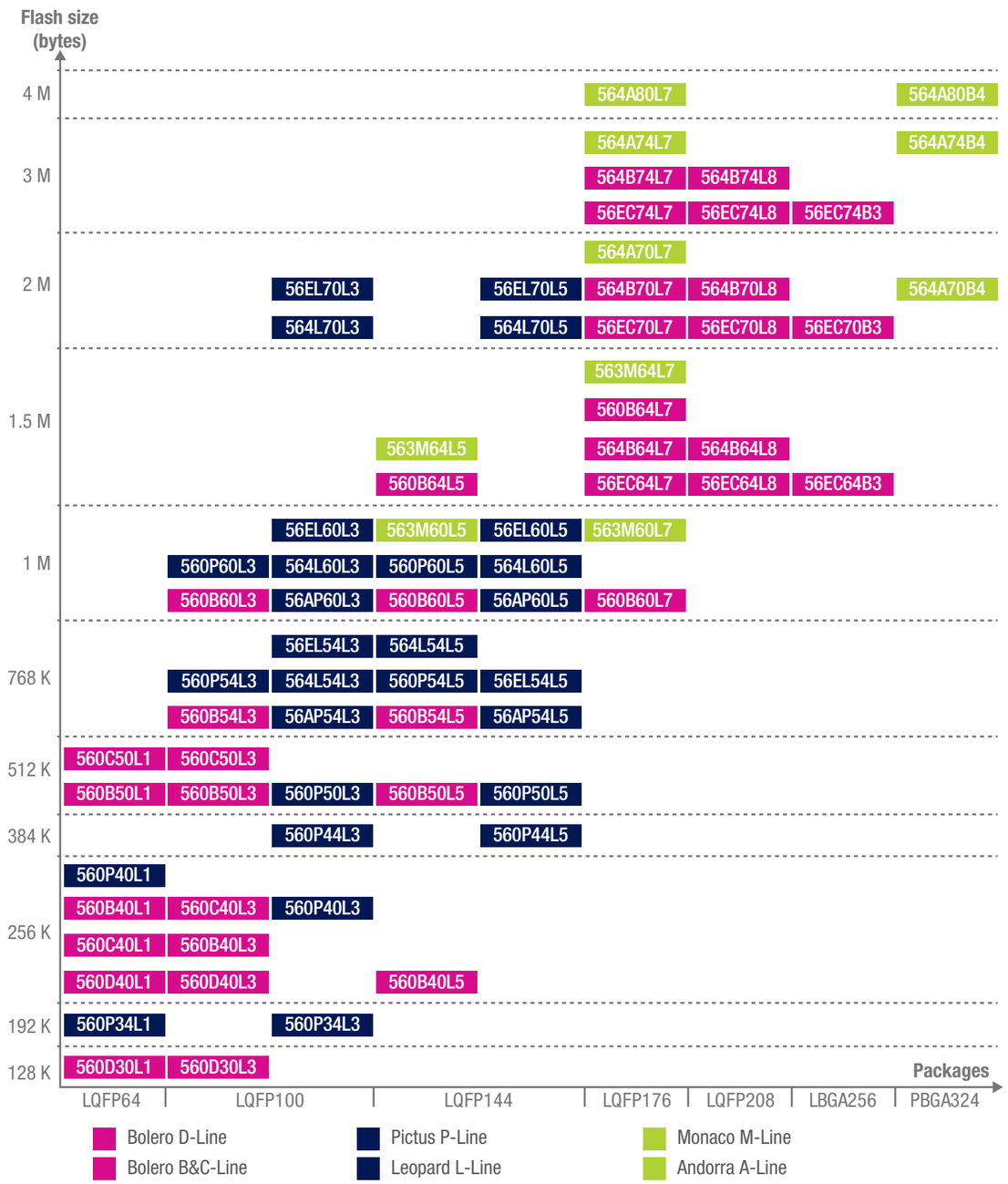

SPC56 Development tools

- Evaluation/Development Boards
- Compiler tool-chains
- Debug and Test Tools
- Flash Programming Tools
- RTOS and middleware
- Training, Consulting and Design
- Calibration tools
- Software downloads

Easier evaluation and faster development

The activities to develop, maintain or debug applications and programs, for any device of the SPC56 family 32-bit microcontrollers, is facilitated by the availability of a full development tool selection, both hardware and software, provided by ST and a network of third parties.
The user can select one of the integrated development environment (IDE) solutions available on the market, containing everything needed to create the code, from the writing phase to the download (into the on-chip Flash memory), without any other additional components. Alternatively, it can combine several related development items in order to create a complete solution.

ST provides an open and flexible design environment (the SPC5 Studio framework) offering a code development solution that can be used either with the GNU GCC compiler and debugger or with any other market solution. Users can easily adopt ST's and third-party stand-alone solutions or integrate their preferred tools into the ST tool framework.

The evaluation and use of any SPC56 family device is facilitated by the availability of boards, covering all different applications needs and budget constraints. Several implemented design solutions let users easily extend board functions, multiplying the number of options. Such an example is the integration of connectors ensuring compatibility between ST Nucleo expansion boards and Arduino family boards.

Whatever choices regarding both software tools and hardware boards, for the development environment platform, a full set of software libraries is available for download, directly from the ST website, providing a wide selection of drivers, protocols and executable examples.

DEVELOPMENT TOOLS AND PROVIDERS

Evaluation boards	life.augmented
RTOS, middleware, libraries (also Autosar compliant)	ETAS, vector, life.augmented
Compiler tools/ IDE	Green Hills Software, TASKING, WIND RIVER, HIGH TEC
Debugging and emulation tools	LAUTERBACH, pls, iSYSTEM, RAISONANCE, PE micro
Training consulting	life.augmented, intecs, MicroConsult
Calibration tools	ETAS, vector

HARDWARE TOOLS

SPC5-UDESTK

The SPC5-UDESTK is a low-cost USB/JTAG interface for debugging and programming SPC56 MCUs. It is developed by PLS for the ST tool-chain. The Universal Design Engine (UDE) Starter Kit offers a collection of tools including source file management, project building and a powerful HLL debugger with high-speed communication paths to the customer's hardware target system with target monitor:

- Supports both the SPC5-UDESTK stand-alone version and the equivalent version embedded in the Discovery board.
- Supports SPC56 MCUs
- Supports multicore, eTPU and GTM debugging
- Provides Flash programming of the on-chip Flash memory featuring Erase / Program / Verify

There are two software licenses and three kit versions available including the SPC5-UDESTK USB/JTAG adapter and the UDE software license.

- SPC5-UDEDEBG is a perpetual, full-feature, unlimited code-size UDE Starter Kit license
- SPC5-UDEDEBG-TL is a time-limited (1 year), full-feature, unlimited code-size UDE Starter Kit license
- SPC5-UDESTK-EVAL includes a perpetual, full-feature, limited code-size (256 Kbytes) license
- SPC5-UDESTK-FULL includes a one-year, full-feature, unlimited code-size license.
- SPC5-UDESTK-PLUS includes a perpetual, full-feature, unlimited code-size license

SPC5-UDESTK can be ordered directly from ST or authorized distributors.

Other third party debugger solutions are available from: Lauterbach, PLS Development Tools, iSystem, Keolabs/Raisonance, P&E Microcomputer Systems.

DISCOVERY BOARDS

The Discovery boards are the easiest and most convenient solution to explore and use the Bolero family, D line and B line.
They can be used both for evaluation and development activities, thanks to the embedded debugging and programming capabilities (due the integration of the PLS USB/JTAG debugger) and the 0.1" pin array connector giving access to all the I/O ports.
The boards are also designed to be used in combination with VIPower / Smart Power expansion boards to offer system solutions.

SPC56D-Discovery with SPC560D40L1
order code: SPC560D-DIS

SPC56B-Discovery with SPC560B54L5
order code: SPC560B-DIS

DISCOVERY+ BOARDS

The Discovery+ boards are designed to cover the higher performance P, L, A and M lines, providing additional connectivity options and extended functions.
All I/O ports are always accessible through 0.1" standardized pin array connector, a JTAG connector is available and the main communication interfaces (CAN, LIN, K-LIN, and UART) are directly accessible through dedicated connectors, with an on-board transceiver.
The PLS USB/JTAG adapter, already integrated in the P-line, can be optionally plugged through the JTAG connector for the other lines.
Other functions for each line can be easily extended using expansion boards through dedicated connectors. The P-line board also implements an Arduino-compatible connector that ensures compatibility with different solutions including the ST Nucleo and third-party shields.

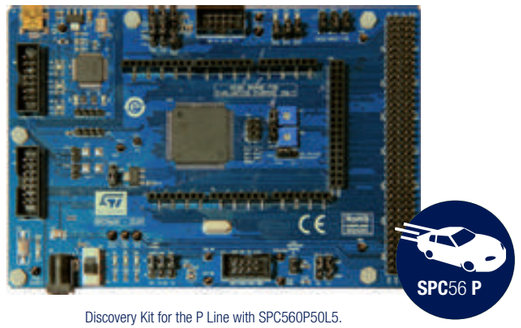

Discovery Kit for the P Line with SPC560P50L5.
order code: SPC560P-DISP

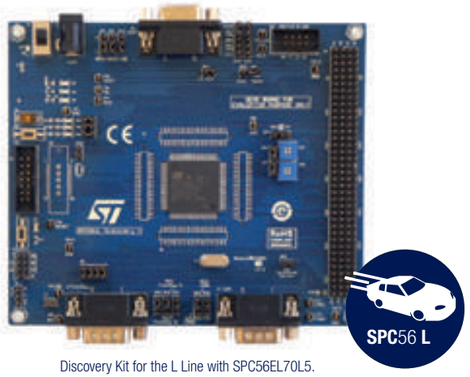

Discovery Kit for the L Line with SPC56EL70L5.
order code: SPC56EL70L5DISP

Discovery Kit for the A Line with SPC564A70L7.
order code: SPC564A-DISP

Discovery Kit for the M Line with SPC563M64L7.
order code: SPC563M-DISP

PREMIUM EVALUATION BOARD

The Premium evaluation kit is a full evaluation platform supporting the SPC56 family of microcontrollers. The complete system consists of a motherboard and a mini-module which plugs into the motherboard. Different mini-modules are available for evaluating powertrain, body, chassis and safety applications with different target devices of the family. The evaluation system allows full access to the CPU, all of the CPU's I/O signals and motherboard's peripherals such as CAN, SCI, LIN, Flex-Ray and Ethernet.

Note: Discovery Kits and Premium Evaluation Boards are supported by specific SPC5Studio Components to immediately start customizing your project.

SPC5-CONNECT

SPC5 Connect is a programmable USB interface designed to connect a PC to development hardware or integrated modules via automotive communication channels such as CAN, SCI, LIN and K-Line.

Based on the 32-bit SPC563M64 microcontroller, the SPC5 Connect offers full access to integrated microcontroller features such as I/O signals, analog channels, external interrupts input and automotive communication buses such as CAN, UART,K-Line, LIN and SPI.

The hardware features, also accessible through the Script Engine firmware, makes the SPC5 Connect a powerful, low-cost and easy-to-use tool for rapid development of small scripts in lab applications. The included extension flat cable with a 14-pin header connector and DB9 connector makes it possible to easily connect a daughter board or wrapping board for a specific application.

SPC5 Connect is supported by a specific set of software tools which allows easy programming of the device as well as basic control and monitoring features of target signals.

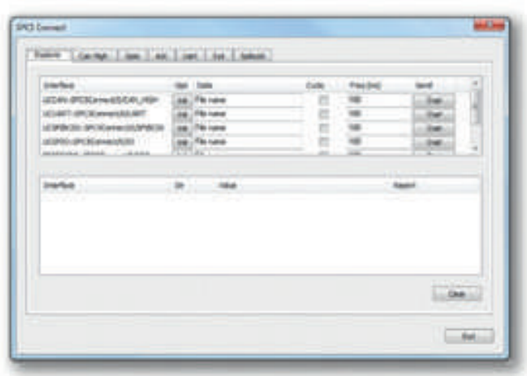

EMULATION BOARDS

Thanks to the cooperation with premium third-party suppliers, ST offers calibration and emulation solutions for the entire range of powertrain, chassis and body applications. Available solutions go from compact calibration hardware modules with integrated debug and memory modules to the standardized VertiCal solutions. The offer is integrated with software and hardware interfaces from ATI, dSPACE, ETAS and Vector Informatik.

SPC5- FLASHER

SPC5-Flasher is a tool for serial programming microcontrollers of the SPC56 family. It is developed to manage the Flash (erasing, programming, verification, reading and checksum functions) on different targets via SCI, CAN, K-line and JTAG in the same tool. The application GUI is a Windows user friendly interface that allows the user to connect the tool with the target using a USB dongle and to perform the tool's functionalities.
The application board should have at least one of the interfaces available.

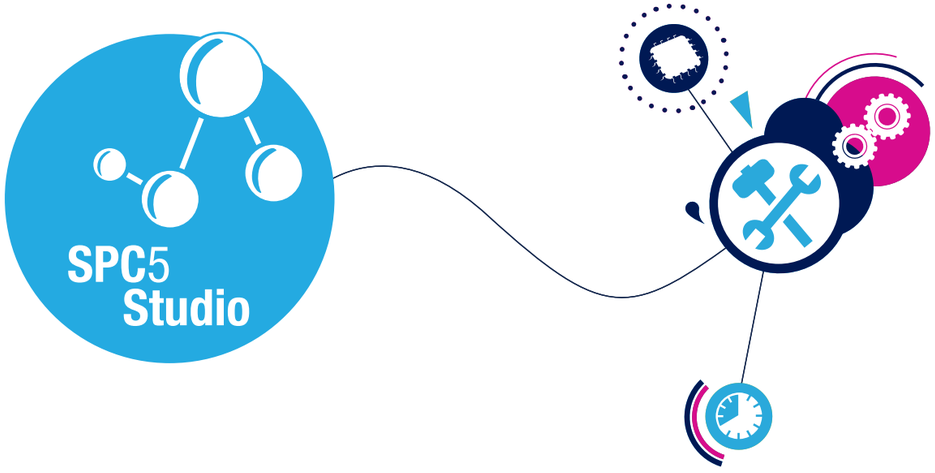

SPC5STUDIO

SPC5Studio is an integrated development environment providing a comprehensive framework to easily design, build and deploy embedded applications for SPC56 Power Architecture® 32-bit microcontrollers. Based on the open-source Eclipse platform, it gives lets users add functions by developing their own plugins.

SPC5Studio combines a project editor, a sophisticated code generator, a dedicated HighTec GNU "C" compiler, a PLS starter kit debugger and several software elements such as code examples, low-level drivers and libraries.

The SPC5Studio generated code is optimized due to the use of modern open-source code-generation techniques and can be used as a reference functional implementation; the generated code can be easily modified to the user's needs.

A project import / export functions allows easy integration with other tools. SPC5studio is available for free and can be downloaded at **www.st.com/spc5studio**.

Easy Configuration and Support through Wizards

The environment can be easily configured in a few mouse clicks thanks to intuitive wizards assisting the user through all the required steps and providing help if required.

- The Application wizard provides a better-than-ever user experience in getting started in developing your own applications with SPC56 MCU's. It leverages ST's Automotive discovery kits, application boards, and all the related software elements to combine software and hardware functions in a few steps, without having to read manuals or write a single line of code.
- The Pin Map wizard allows the visual configuration of I/O alternate functions and the automatic generation of initialization code as well as includes an automatic conflict checker. A configuration summary is also provided in XLS format to let customers check the consistency of their application's PCB.
- The documentation wizard offers on-line help and access to component documentation.

Facilitates implementation of low-level drivers

For the Hardware Abstraction Layer (HAL), the first level interacting with the MCU hardware, the SPC5Studio embeds a consistent programming interface across all the product lines, characterized by:

- A unique set of Application Programming Interfaces (API) for the abstraction of hardware-dependent functions
- Compatibility across all SPC56 family
- Support for all key peripherals (general-purpose timer, ADC, ICU/PWM, RTC, SPI, CAN, serial interface, buffered UART, I2C, Flash, EEPROM, External Interrupt, etc.).

Wide variety of software library examples

Executable examples help you get started quickly with SPC56 Discovery kits and microcontrollers. Each example, in the SPC5Studio, includes source files, the related binary and .elf files to program modify and debug with any environment/tool. They include SPC5Studio project files which are easy to import, open and modify using SPC5Studio configurator wizards.

SOFTWARE LIBRARIES

Available for download at no charge from ST website

- Flash drivers
  They include highly portable Flash drivers for run-time and off-line device programming
- Communication protocols
  Main automotive protocols are supported directly by ST or in collaboration with Vector Informatik GmbH. In particular ST offers solutions for LIN and MSC (Micro-second-bus) protocols while Vector supports CAN, LIN and J1939 protocols for all SPC56 product lines.
- Cryptography Software Library
  The cryptography library can run on the whole SPC56 microcontroller family. It provides software algorithms and examples for symmetric and asymmetric encryption/decryption, message authentication and random number Generation. The SPC564B/EC versions include a cryptographic engine, for which ST offers, for easy integration and use, a CSE hardware function abstraction view and software library extensions for extending hardware capabilities. It is delivered as SPC5Studio plug-in.
- RTOS/Kernel
  RTOS is the root component to share time between several tasks on a single core. It ensures task switching within a known and limited duration. Several solutions for the SPC56 are available, both open-source and commercial versions are available, including ChibiOS, Intecs, ETAS, Vector and Green Hills products.

Available under license (contact ST sales office for more details)

- Safety-oriented libraries
- ST offers solutions to increase the system functional safety level and integrity of the microcontroller:
  - Core Self-Test: Fault graded Core Self-Test library for SPC56 featuring e200z0h or e200z4d cores
  - Instruction Self-Test: Instruction Self-Test library to validate the correct execution of all instruction (VLE, BookE, SPE) ensuring the full functionality of e200z0h or e200z4d cores in SPC56 products.
- Software components for AUTOSAR enabled systems
  The Automotive Open System Architecture (AUTOSAR) is a worldwide development partnership of car manufacturers, suppliers and other companies from the electronics, semiconductor and software industries to facilitate the exchange and update of software and hardware over the service life of the vehicle. STMicroelectronics is an AUTOSAR Premium Partner, and committed to support the development of standardized software infrastructures for automotive applications.
  ST's MCAL Suite, based on proprietary HAL drivers, is an optimized and comprehensive set of AUTOSAR-compliant drivers featuring top performance with the smallest memory footprints. The suite is developed and validated in accordance with CMMI and AUTOSPICE level 3 framework to guarantee high quality standards and is complemented by Complex Device Drivers and libraries, to support SPC56 standard / non-standard microcontroller peripherals.
  The MCAL Suite and full AUTOSAR solutions are available with multiple licensing options (evaluation, development and production licenses/project, product and company licenses) to fulfill challenging technical and cost targets.

Note: Contact your ST sales office for more details on ST's software offer. Other information including a detailed availability matrix are available on www.st.com.

SPC56 Powertrain applications

POWERING GREEN INNOVATIONS IN INTERNAL COMBUSTION ENGINE (ICE) VEHICLES

Today, most new cars sold worldwide are powered by internal combustion engines and, even under the more optimistic view on green solutions diffusion, they will continue to power most of the vehicles in the near future.
For this reason, internal combustion engines have been (and will continue to be) the center of green innovations, with more and more demanding emissions regulations as well as requests for increased fuel economy.
The request for efficiency has revolutionized the requirements in all the related powertrain applications which are increasingly adopting sophisticated solutions requiring more processing power, safety and security levels.
The evolution of transmission systems is a good example of this trend. New advanced automatic transmission systems improving gear change time and fuel consumption; the dual-clutch transmission system eliminates torque converter losses and improves gear change time.
ST provides silicon solutions for a broad range of engine management systems (for gasoline, diesel and gas engines) as well as actuation and transmission controls.

SUPPORT FOR HYBRID ELECTRIC VEHICLES (HEV) AND PURE ELECTRIC VEHICLES (EV)

One of the most effective methods to address the growing requirement for lower vehicle emissions and higher energy efficiency is the development of hybrid electric vehicles and electric vehicles. In series and parallel HEV applications as well as full plug-in Electric Vehicles, a high-voltage battery pack supplies energy to feed primarily the traction system, but additionally the other electrical systems in the car.
Thanks to extensive experience in industrial systems and automotive products, ST is able to propose complete solutions both for all the propulsion and the actuation systems of the vehicle.

SPC56 DEDICATED LINES

SPC56 M-Line and **SPC56 A-Line** are dedicated to the specific needs of powertrain applications. With unmatched modularity and compatibility, a new state-of-the-art technology, combined with a high-performance core and tailor-made peripherals, make these MCUs the perfect platform solution, optimizing system cost and performance.

Gasoline Port injection

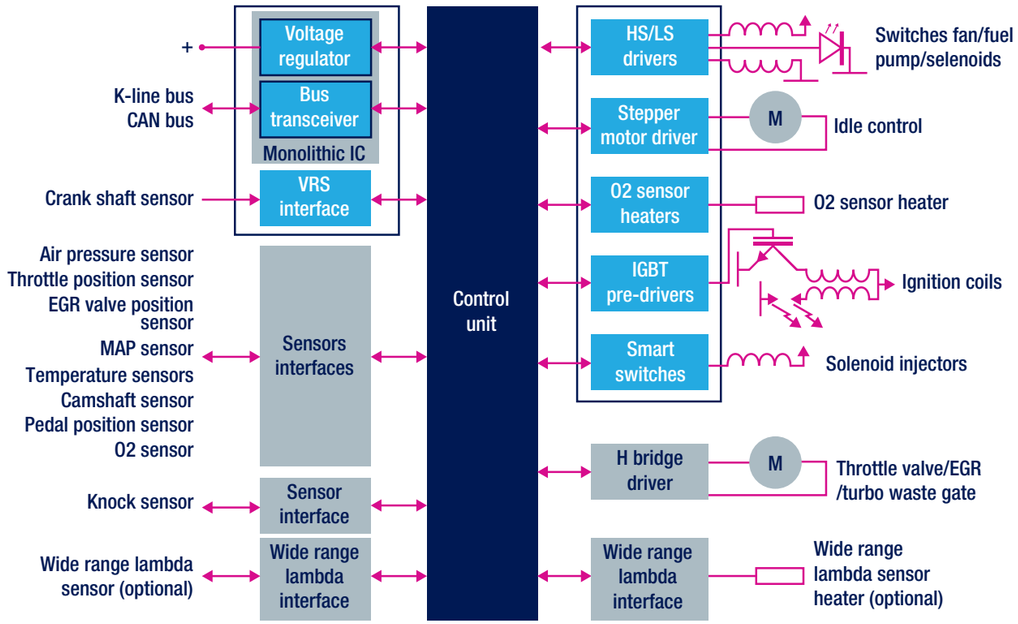

Governmental regulations and energy concerns are driving the automotive industry to develop very high performing gasoline-engine control systems. These improvements enhance electronic throttle control, gasoline direct injection and variable valve timing applications, just to mention a few.
ST offers a strong portfolio of advanced technologies (BCD for combining precision analog, power, digital and non-volatile memory functions; embedded Flash 32-bit microcontrollers for real-time control), coupled with an extensive standard product offering to meet market demands.

SUGGESTED PRODUCTS

- **SPC56 M-Line, SPC56 A-Line:** 32-bit SP56 MCU family
- **L9758:** Multi-voltage regulator
- **L9615, L9616:** Can bus transceiver
- **L9637:** ISO9141 transceiver
- **L9733:** Octal configurable low-/high-side driver
- **L9826:** Octal low-side driver
- **L9942, L9935:** Stepper motor driver for bipolar motors
- **VBG08H:** Single-channel driver, with IGBT power stage internally assembled using Chip –On-Chip (COC) hybrid technology
- **L9651:** Smart quad switch (Injectors)
- **L9959, L9960:** H-bridge motor control
- **L9779:** It provides all basic function for standard engine management control units (voltage regulator, switches, pre-drivers, drivers)

Gasoline Direct injection

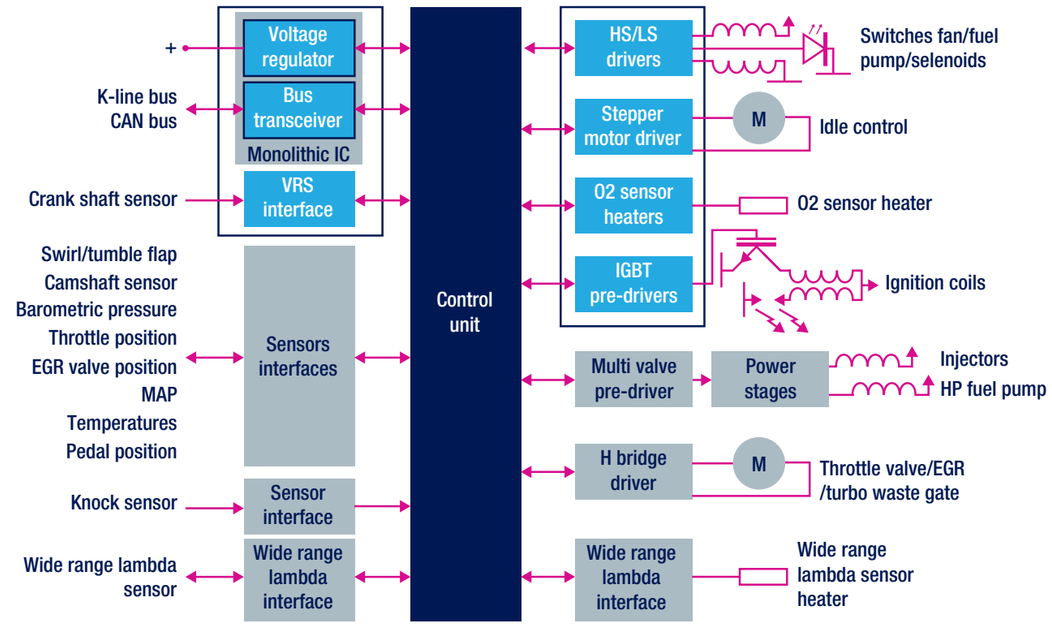

Governmental regulations, energy concerns and market requirements for very high performing vehicles pushed automakers to develop enhanced gasoline engine. A key application combining fuel saving and high performance is the Direct Injection system (GDI). ST, with a strong portfolio of advanced technologies, can provide a comprehensive solution for GDI. The block diagram above shows an example of ST's solution.

SUGGESTED PRODUCTS

- **SPC56 M-Line, SPC56 A-Line:** 32-bit SP56 MCU family
- **L9758:** Multi-voltage regulator
- **L9615, L9616:** Can bus transceiver
- **L9637:** ISO9141 Transceiver
- **L9733:** Octal configurable low-/high-side driver
- **L9826:** Octal low-side driver
- **L9942, L9935:** Stepper motor driver for bipolar motors
- **VBG08H:** Single-channel driver, with IGBT power stage internally assembled using Chip-On-Chip (COC) hybrid technology
- **L9651:** Smart Quad Switch (Injectors)
- **L9780:** Wide range air fuel lambda sensor control interface
- **L9781:** Multi-valve pre-driver capable of driving 11 external N-channel logic level MOSFETs, controlling up to 5 inductive loads through peak and hold (DI Injectors)
- **L9959, L9960:** H-bridge motor control
- **L9779:** It provide all basic function for standard engine management control units (voltage regulator, switches, pre-drivers, drivers)

Diesel Direct injection

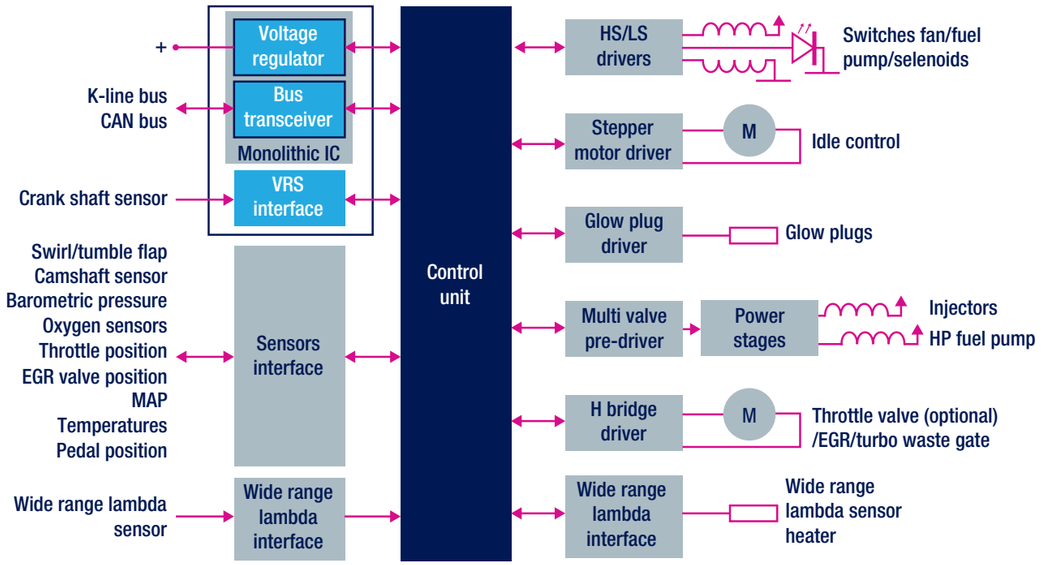

Governmental regulations and energy concerns are driving the automotive industry to develop very high performing diesel-engine control systems. These improvements enhance electronic throttle control, high voltage injectors and glow plugs applications, just to mention a few. ST offers a strong portfolio of advanced technologies (BCD for combining precision analog, power, digital and non-volatile memory functions; embedded Flash 32-bit microcontrollers for real-time control), coupled with an extensive standard product offering to meet market demands. An example of this enhanced EMS is shown in the block diagram above.

SUGGESTED PRODUCTS

- **SPC56 M-Line, SPC56 A-Line:** 32-bit SP56 MCU family
- **L9758:** Multi-voltage regulator
- **L9615, L9616:** Can bus transceiver
- **L9637:** ISO9141 transceiver
- **L9780:** Wide range air fuel lambda sensor control interface.
- **L9733:** Octal configurable low-/high-side driver
- **L9826:** Octal low-side driver
- **L9524:** Glow plug system control IC
- **L9781:** Multi-valve pre-driver capable of driving 11 external N-channel logic level MOSFETs, controlling up to 5 inductive loads through peak and hold (DI injectors)
- **L9959, L9960:** H-bridge motor control
- **L9942, L9935:** Stepper motor driver for bipolar motors

CNG/LPG Engine control

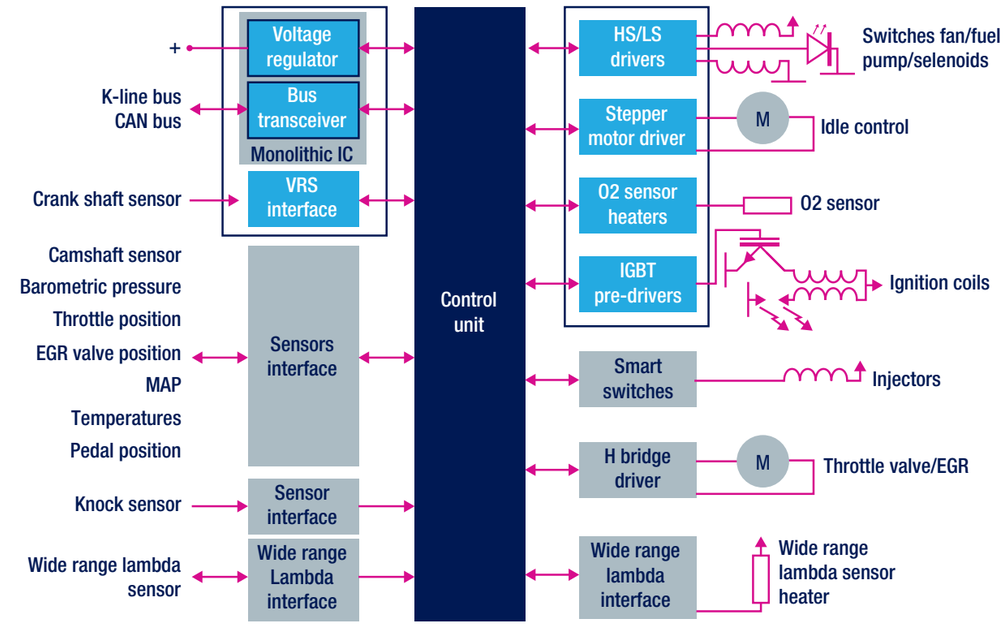

Both CNG and LPG powertrain systems are cheaper and more eco-friendly in cars than diesel or gasoline systems. Their combustion is comparably cleaner, reducing emissions of particulates and nitrogen oxides. Both fuels are also cheaper than gasoline or diesel. ST offers a strong portfolio of advanced technologies (BCD for combining precision analog, power, digital and non-volatile memory functions; embedded Flash 32-bit microcontrollers for real-time control), coupled with an extensive standard product offering to meet market demands. The block diagram above shows an example of ST's solution.

SUGGESTED PRODUCTS

- **SPC56 M-Line, SPC56 A-Line:** 32-bit SP56 MCU family
- **L9758:** Multi-voltage regulator
- **L9615,L9616:** Can bus transceiver
- **L9637:** ISO9141 transceiver
- **L9733:** Octal configurable low-/high-side driver
- **L9826:** Octal low-side driver
- **L9942, L9935:** Stepper Motor Driver for Bipolar Motors
- **L99SD01:** Integrated solenoid driver for CNG electronic injection systems
- **L9780:** Wide-range air fuel lambda sensor control interface.
- **VBG08H:** Single-channel driver, with IGBT power stage internally assembled using Chip-On-Chip (COC) hybrid technology
- **L9781:** Multi-valve pre-driver capable of driving 11 external N-channel logic level MOSFETs, controlling up to 5 inductive loads through peak and hold (DI Injectors)
- **L9959, L9960:** H-bridge motor control drivers
- **L9779:** ASP provide all basic function for standard engine management control units (Voltage Regulator, switches, pre-drivers, drive

Automated Manual transmission

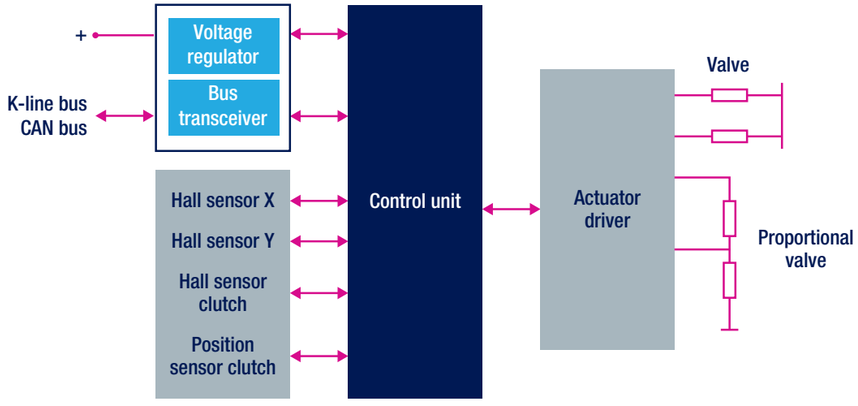

The Automated Manual Transmission (AMT) electronic system is an advanced control system for gear shifting. This electronically-actuated and synchronized clutch and gear-box improves the driving experience, especially in city traffic, thanks to its capacity to complete the clutch and gear-shift operations much more quickly and precisely than a human driver.

SUGGESTED PRODUCTS

- **SPC56 M-Line, SPC56 A-Line:** 32-bit SP56 MCU family
- **L9758, L9396:** Multi-voltage regulator
- **L9615, L9616:** Can bus transceiver
- **L9637:** ISO9141 transceiver

Electric Traction

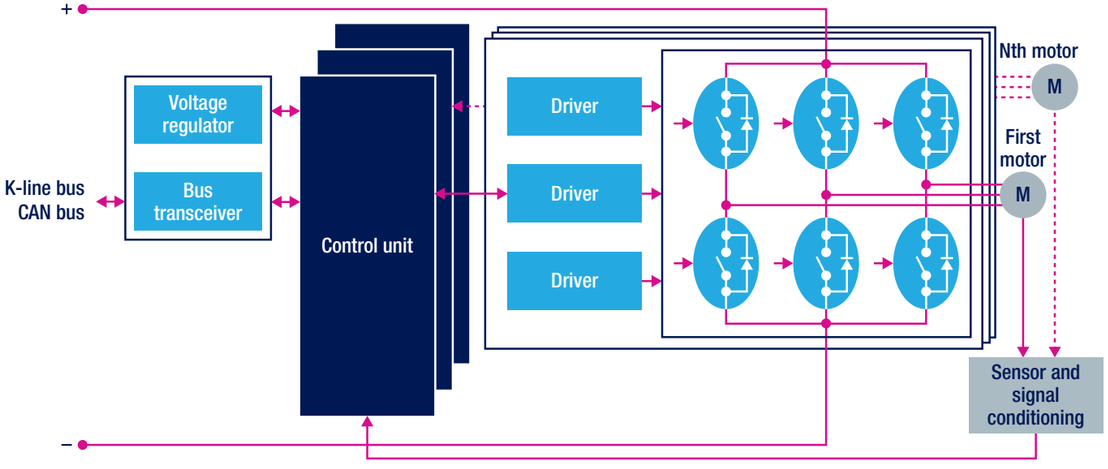

Electric vehicles are powered by electric motors supplied by rechargeable electric energy storage systems. Several schemes to implement the propulsion system are already available, as well as several solutions to recharge the power accumulators. A good solution for light-weight, small-size vehicles is a low-voltage electric traction system. The embedded electronics must have high reliability standards to ensure efficiency under all conditions.
With its broad product portfolio of power switches, coupled with its ICs and microcontrollers, ST ensures the best solutions for your electric traction application.

SUGGESTED PRODUCTS

- **SPC56 L-Line, SPC56 P-Line, SPC56 M-Line, SPC56 A-Line:** 32-bit SP56 MCU family
- **L9396:** Multiple power supply
- **L99PM:** Power management IC with LIN and high speed CAN
- **A6986:** Switching regulator
- **L4925, L4995:** Linear voltage regulator
- **L9615,L9616:** Can bus transceiver
- **L9637:** ISO9141 transceiver
- **L6384:** Half H-bridge driver, high-voltage (V400)
- **A6387:** 600V high- and low-side driver for Power MOSFETs and IGBTs
- **STGAP1S:** 4kV galvanically isolated single-gate driver for Power MOSFETs and IGBTs with advanced protection

Battery Charger system

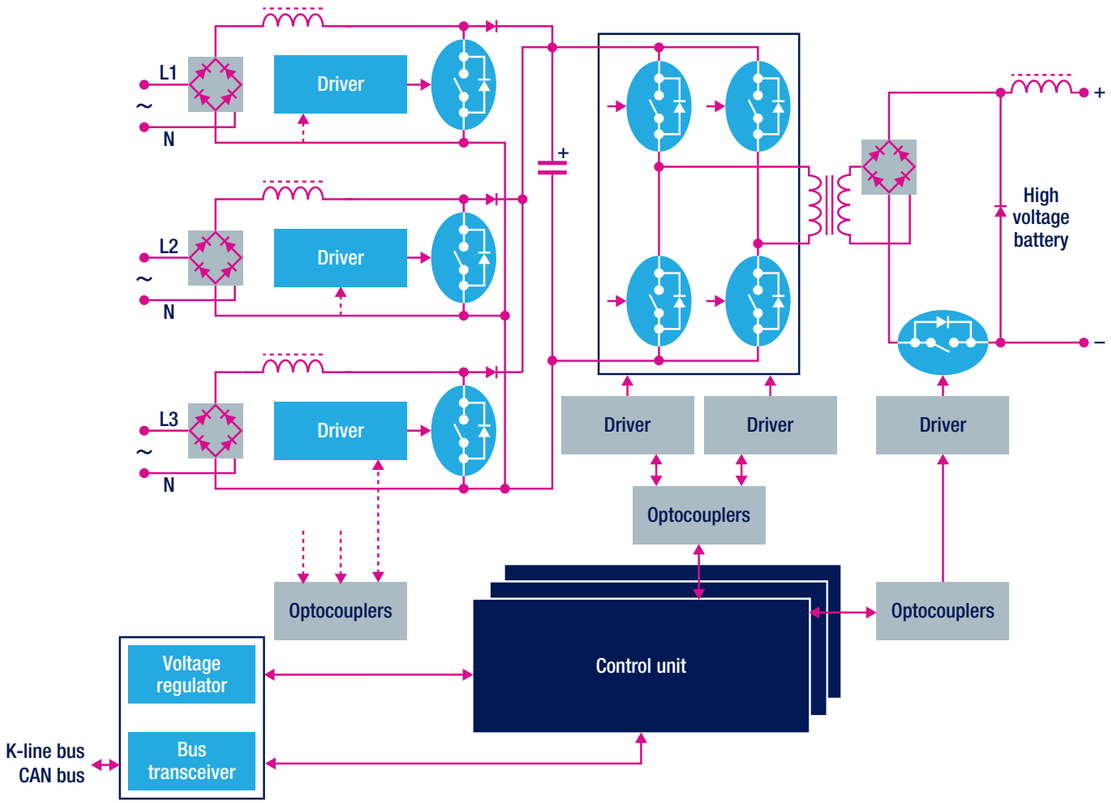

Recharging the battery from the mains supply is mandatory for electric vehicles and optional for hybrid electric vehicles. Mains converters are thus devices that are going to become much more common. The one shown above is a conversion system from a standard mono-phase and industrial three-phase mains supply to the DC high-voltage of the battery pack.

SUGGESTED PRODUCTS

- **SPC56 M-Line, SPC56 A-Line, SPC56 L-Line, SPC56 P-Line:** 32-bit SP56 MCU family
- **L99PM:** Power management IC with LIN and high speed CAN
- **A6986:** Switching regulator
- **L4925, L4995:** Linear voltage regulator
- **L9615,L9616:** Can bus transceiver
- **L9637:** ISO9141 transceiver
- **L6384:** Half H-bridge driver, high-voltage (V400)
- **A6387:** 600V high- and low-side driver for Power MOSFETs and IGBTs
- **STGAP1S:** 4kV galvanically isolated single-gate driver for Power MOSFETs and IGBTs with advanced protection

Bidirectional Power converter

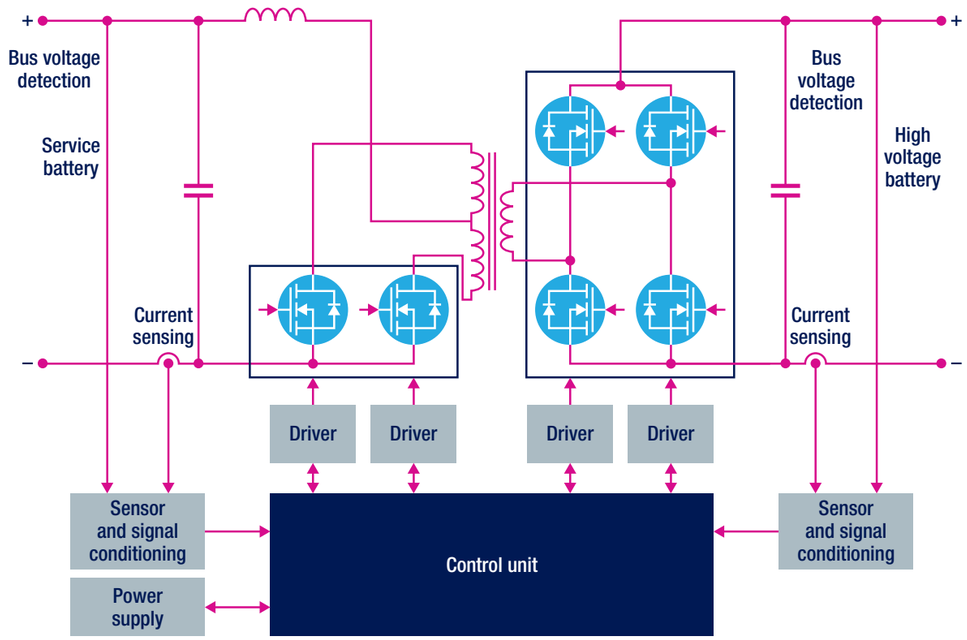

Electric vehicles usually have two kinds of battery, a standard 12 V voltage for the general electric appliances, and a high-voltage battery pack to provide the power for the electric traction motors. There is an energy exchange between them.
The 12V battery is no longer recharged by the alternator, but is charged from the high-voltage battery pack. For this purpose, a standard DC-DC converter is used. However, in some cases it could be necessary to reverse operation, and to recharge the high-voltage battery pack from the low-voltage battery to crank the car.
The control algorithm is implemented on a microcontroller, giving substantial advantages in terms of cost, flexibility and also efficiency, due to the possibility of an easy synchronous rectification implementation.

SUGGESTED PRODUCTS

- **SPC56 M-Line, SPC56 A-Line, SPC56 L-Line, SPC56 P-Line:** 32-bit SP56 MCU family
- **L99PM:** Power management IC with LIN and high speed CAN
- **A6986:** Switching regulator
- **L4925, L4995:** Linear voltage regulator
- **L9615,L9616:** Can bus transceiver
- **L6384:** Half H-bridge driver, high-voltage (V400)
- **A6387:** 600V high- and low-side driver for Power MOSFETs and IGBTs
- **STGAP1S:** 4kV galvanically isolated single-gate driver for Power Mosfets and IGBTs with advanced protection

SPC56 Chassis and safety applications

Today cars are more and more equiped to minimize the occurrence and consequences of accidents improving driving exsperience and safety. Active and passive safety systems as well as suspension control to optimize the comfort/road-holding compromise have led to a dramatic increase of electronics sophistication, compliant with the highest safety standard (ISO 26262).

STMicroelectronics has developed dedicated devices to facilitate the design of such systems and the achievement of the required functional safety level certification (Automotive Safety Integrity Level from ASIL-A to ASIL-D).

SPC56 DEDICATED LINES

STMicroelectronics SPC56 P-Line and SPC56 L-Line are dedicated to the specific needs of chassis and safety applications, with a specific focus on functional safety and advanced three-phase motor control. The unique modularity and scalability of the architecture provides compatible devices covering the wide range of chassis and safety applications with optimum cost, safety and performance trade-offs.

ABS & ESC

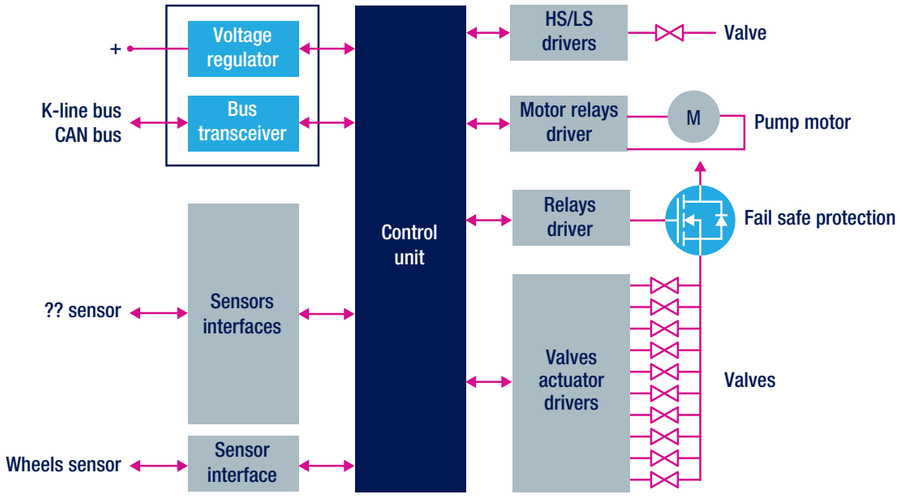

Today Anti-lock Bracking System (ABS) is a standard equipment for a large majority of vehicles on the market and it is one of the most necessary safety functions available in automotive systems. Electronic stability control (ESC) is rapidly following the same path, imposing itself as an important function with its effectiveness against skidding, thus significantly enhancing passengers safety. ST offers a wide range of flexible and innovative ASSP products, fully covering any possible system partitioning. The combination of innovation and complexity of ST's BCD (bipolar, CMOS, and DMOS) technology along with a strong competence due to 15 years' experience of close co-operation with the largest OEM's, makes ST a world leader in braking system ICs.

SUGGESTED PRODUCTS

- **SPC56 L-Line, SPC56 P-Line:** 32-bit SP56 MCU family
- **L9758:** Multi-voltage regulator
- **L9396:** Multiple power supply
- **L9663:** The peripheral sensor interface (PSI5)
- **L9615, L9616:** Can bus transceiver
- **L9380:** Triple high-side MOSFET driver
- **L9301:** SPI-controlled octal channel with 4 high-/low- and 4 low-side driver with the possibility to use four integrated power MOS as recirculation diodes for PWM load driving

Active Suspension

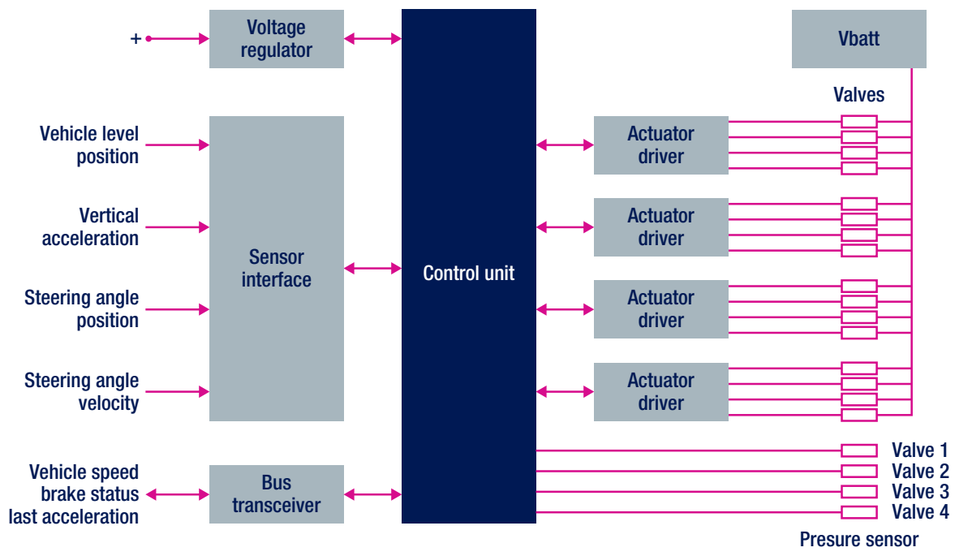

Active suspension is a high-end vehicle electronics solutions and ST is ready to meet the needs of this demanding application by providing everything from high-end embedded microcontrollers to sophisticated valve drivers for precision control and fast response time. Providing solutions from the embedded microcontroller to the power switches, from voltage regulation to the serial communications physical layer, ST has the answer for your active suspension needs.

SUGGESTED PRODUCTS

- **SPC56 L-Line, SPC56 P-Line:** 32-bit SP56 MCU family
- **L99PM:** Power management IC with LIN and high speed CAN
- **A6986,L9758:** Switching regulator
- **L9663:** The peripheral sensor interface (PSI5)
- **L4925, L4995:** Linear voltage regulator
- **L9615,L9616:** Can bus transceiver
- **L9332:** Quad intelligent power low-side switch
- **L9301:** SPI-controlled octal channel with 4 high-/low- and 4 low-side driver with the possibility to use four integrated power MOS as recirculation diodes for PWM load driving

Electric Power Steering (EPS)

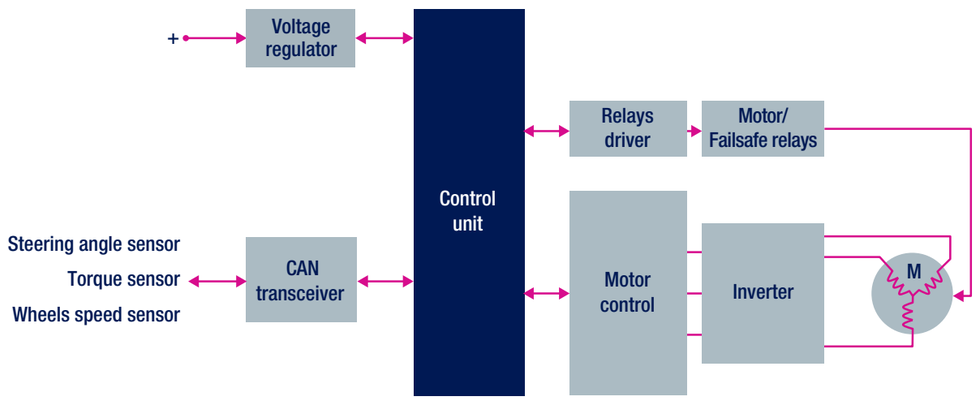

Electric power assisted steering (EPAS) systems have gained wide market acceptance over the last several years. The main advantage of an EPAS system over a hydraulic one is the use of an electric motor. This provides directional control to the vehicle driver and reduce engine loading, resulting in improved fuel economy. Typical systems employ avariable-assist feature, which provides more assistance at lower speeds and less assistance at higher speeds. ST, with its broad portfolio of power drivers for brushless motor control, coupled with our advanced 16/32 bit microcontroller product families and an extensive standard product offering, is the obvious choice for any power steering application. A sampling of ST products applicable to power steering control systems are shown in the block diagram above.

SUGGESTED PRODUCTS

- **SPC56 L-Line, SPC56 P-Line:** 32-bit SP56 MCU family
- **L9758:** Multi-voltage regulator
- **L9615, L9616:** Can bus transceiver
- **L9396:** Multiple power supply
- **L9663:** The peripheral sensor interface (PSI5)
- **L9907:** FET driver for 3-phase BLDC motors
- **STripFET™ F7:** Power MOSFETs

Airbag Systems

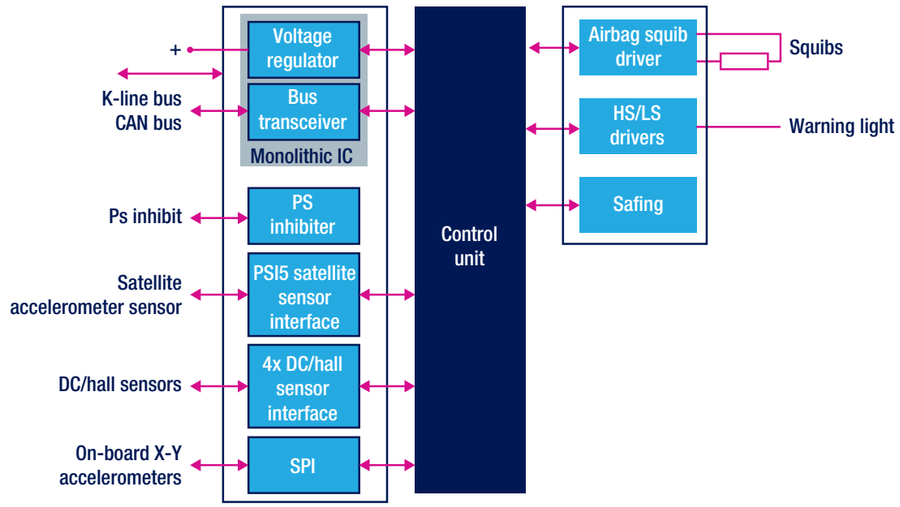

Airbag systems increase passenger safety in all vehicles from small city cars to luxury SUVs. To serve these different market segments, the automotive industry is focusing in three main areas:

- Cost effectiveness (low-end vehicles)
- System complexity (advanced features and increasing number of squibs and satellites)
- High reliability standards

ST is the ideal partner to achieve these goals through proprietary silicon technologies (BCD – Bipolar, CMOS, and DMOS) and a wide range of products covering full custom ICs and very flexible open-market solutions. The block diagram above illustrates the application system based on ST products, starting from the sensor interface, power supply, and microcontroller up to squib drivers.

SUGGESTED PRODUCTS

- **SPC56 L-Line, SPC56 P-Line:** 32-bit SP56 MCU family
- **L9758:** Multi-voltage regulator
- **L9615,L9616:** Can bus transceiver
- **L9680, L9678, L9679, L4999:** System basis IC for Airbag
- **L9643:** SPI-bridge for multi SPI masters
- **AIS1200PS:** Peripheral acceleration sensor with a single-axis sensing element with PSI5 point-to-point interface
- **L9663:** PSI5 transceiver

SPC56 Body and convenience applications

IMPROVING DRIVING EXPERIENCE THROUGH COMFORT AND SECURITY

Cars and other vehicles contain some of the most complex electronic systems used by most of us daily. Car body and convenience applications involve a broad variety of these systems ranging from comfort of drivers and passengers, to car security access, to vehicle networking.

Data buses and intelligent modules are located throughout the car body to control the various loads, lamps, motors and solenoids in applications such as:

- Dome and door zone controls for mirrors, windows and locks
- Automatic climate control systems with controls for stepper motors, and solenoids for air and water valves
- Wiper and seat controls
- Increasingly complex lighting controls with the rapid uptake of HID Xenon and LED lamps

ST's broad range of mixed analog digital technologies with power driving capability, and system-on-chip (SoC) devices allow innovative and integrated solutions for the highly automated systems found in cars.

SPC56 DEDICATED LINES

STMicroelectronics SPC56 B-Line, SPC56 C-Line and SPC56 D-Line are dedicated to the specific needs of body and convenience applications with a focus on networking and security. Their architecture's unique modularity and scalability provides compatible devices covering the wide range of car body applications with tailored peripherals, optimum cost and performance trade-offs.

Body Control module

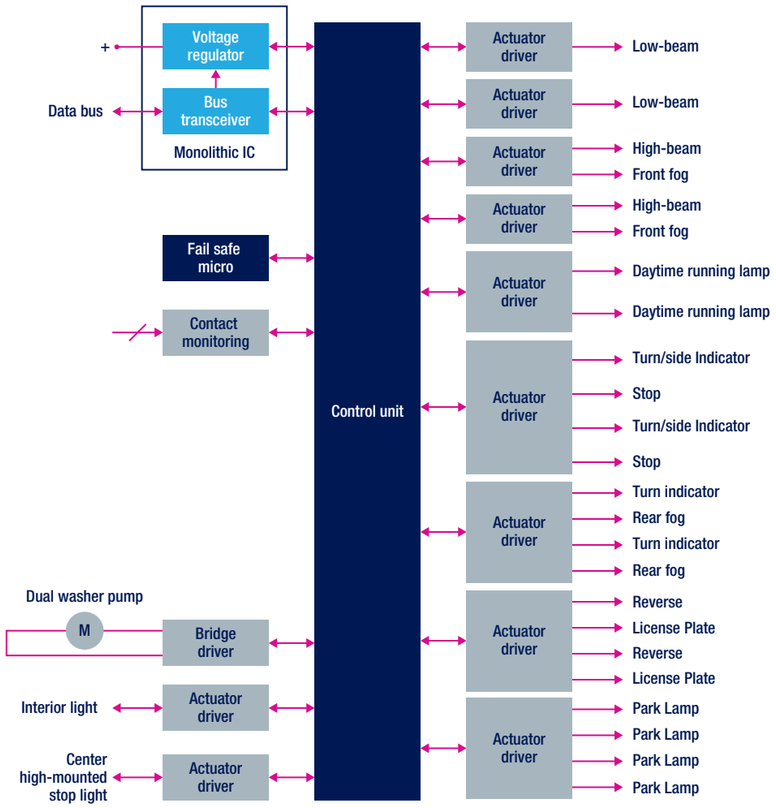

Today's body control modules require high reliability electronic components to ensure safe and proper operation under all conditions. Most modern systems drive a large variety of loads: from lamps (incandescent, HID, Xenon) with advanced diagnostics (bulb outage detection, overload, etc.) and drive features (PWM, DC) to motors substituting existing electromechanical relays. From bridge, high-/low-side drivers and advanced regulators to low-cost, high-performance microcontrollers, coupled with an extensive standard product offering, ST has a broad range of solutions to choose from regardless of where the unit is mounted in the vehicle (cabin, rear, underhood). An example of ST products that are applicable to junction box systems are shown in the block diagram above.

SUGGESTED PRODUCTS

- **SPC56 B-Line, SPC56 C-Line , SPC56 D-Line:** 32-bit SP56 MCU family
- **L99PM:** Power management IC with LIN and high-speed CAN
- **A6986:** Switching regulator
- **L4925, L4995:** Linear voltage regulator
- **L9615,L9616:** Can bus transceiver
- **M0-5, M0-6, M0-7 family:** Single-, double- and quad-channel high-side switches

Gateway Solutions

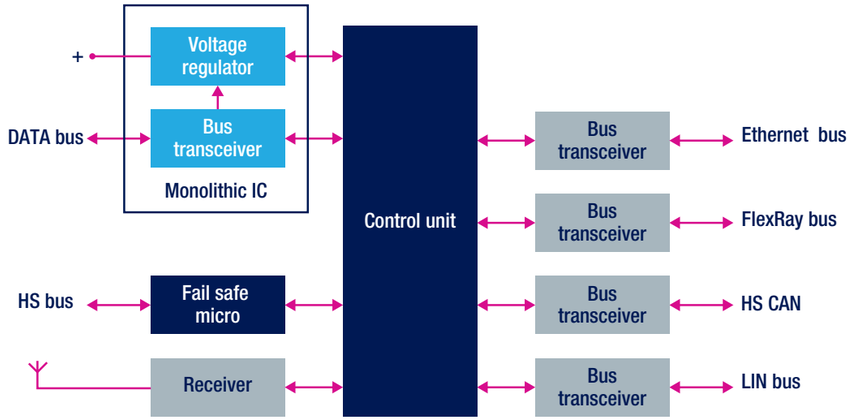

A gateway controller serves as a communication bridge between the various networks inside the vehicle, including but not limited to CAN (low, high speed), LIN, ISO-9141 and J1850. The electronics may reside in a standalone module or may be embedded in another application, such as a smart junction box, body controller, or instrument cluster. ST, with a broad portfolio of BCD, CMOS and power technologies, can provide a complete gateway solution, including bus transceivers, regulators and low-cost, high-performance microcontrollers with on-chip network protocol handlers. Examples of ST products that are applicable to gateway applications are shown in the block diagram above.

SUGGESTED PRODUCTS

- **SPC56 B-Line, SPC56 C-Line , SPC56 D-Line:** 32-bit SP56 MCU family
- **L99PM:** Power management IC with LIN and high-speed CAN
- **A6986:** Switching regulator
- **L4925, L4995:** Linear voltage regulator
- **L9615,L9616:** Can bus transceiver

Door Zone system

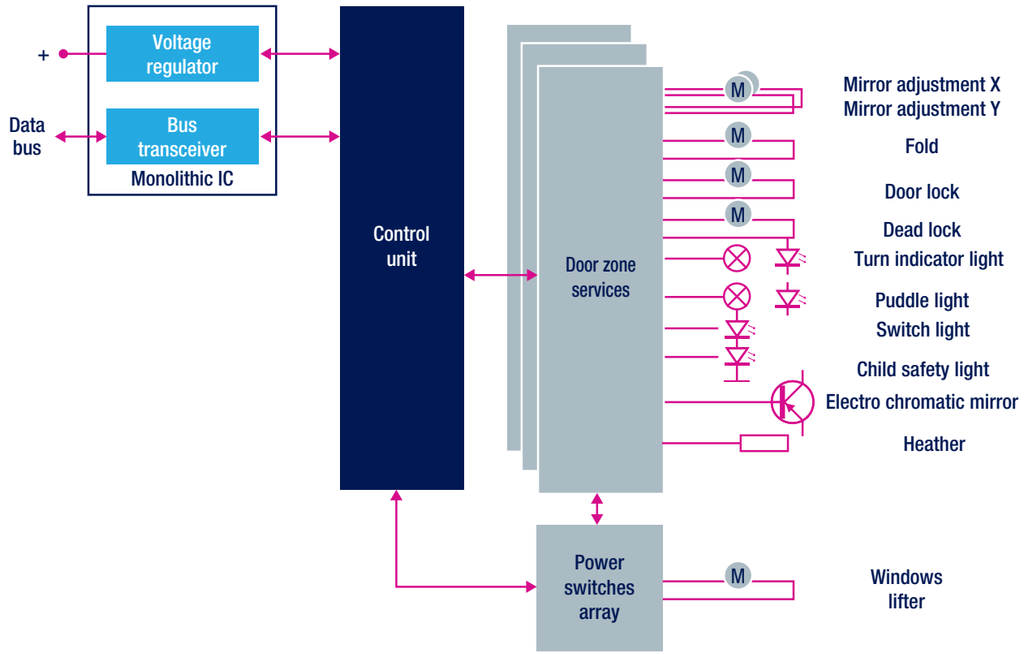

The actuator drivers designed by ST for automotive door zone applications are characterized by a scalable actuator driving concept, compatible with package and software, to satisfy the multiplicity of door electronics systems. The drivers support all regular door zone loads such as door lock motors, mirror folder and leveling, defroster, and several lighting functions using LEDs.

SUGGESTED PRODUCTS

- **SPC56 B-Line, SPC56 C-Line , SPC56 D-Line:** 32-bit SP56 MCU family
- **L99PM:** Power management IC with LIN and high-speed CAN
- **A6986:** Switching regulator
- **L4925, L4995:** Linear voltage regulator
- **L9615, L9616:** Can bus transceiver
- **VNH50:** H-bridge DC motor control
- **L99DZ:** Door actuator driver

LED Lighting systems

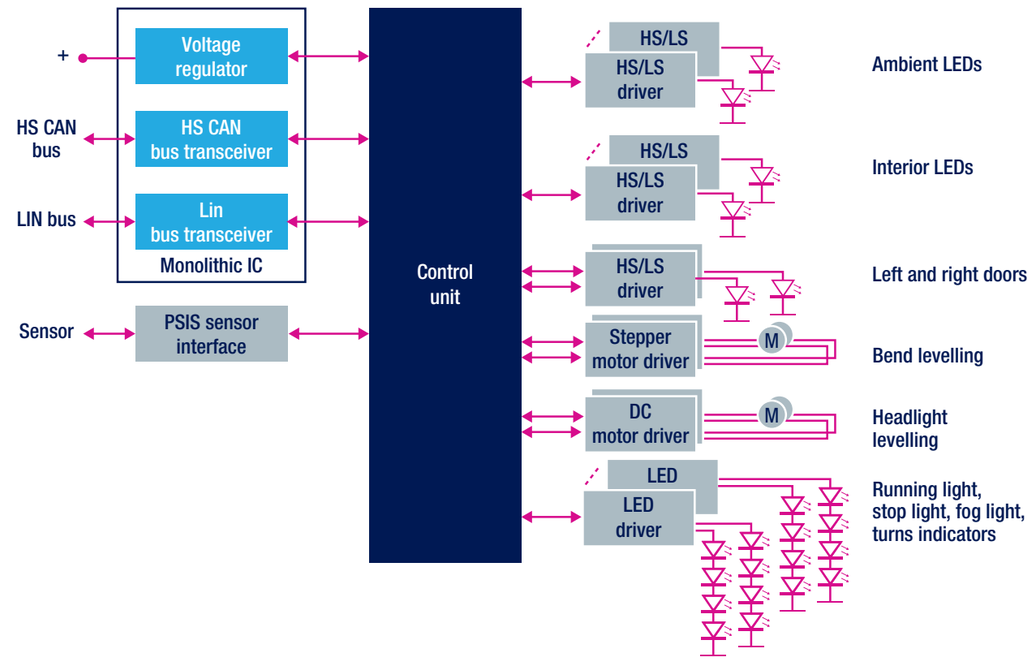

Halogen lighting is currently the most-used technology in automotive for vehicle front, rear, side, & interior lighting. Being used for many years due to its easy availability and low cost, it will soon be replaced by LED technology pushed by its tempting features: power efficiency and its incomparable duration (with innate shock resistance), design flexibility and continuous cost decreases.
ST offers a wide range of compact and efficient solutions to fully support LED lighting technology in all automotive applications featuring all the functions needed to ensure greater power-saving.

SUGGESTED PRODUCTS

- **SPC56 B-Line, SPC56 D-Line:** 32-bit SP56 MCU family
- **L99PM:** System basis chip integrating voltage regulator, HS CAN and LIN transceiver
- **L9663:** PSI5 transceiver
- **L99LD21, L99LD31:** flexible LED driver, designed to control two independent high-brightness LED strings
- **L9942:** Stepper motor driver
- **M0-5, M0-6, M0-7 family:** Single-, double- and quad-channel high-side switches
- **STripFET™ F7:** Power MOSFETs

SPC56 Transportation

HIGH-PERFORMANCE, ENVIRONMENT-FRIENDLY SOLUTIONS

STMicroelectronics supports all kinds of transportation with sustainability in mind, constantly finding ways to reduce emission and fuel consumption, using cutting-edge electronics technologies to meet the most demanding requirements in terms of performance, safety and security.
Whether for leisure, commercial or industrial transportation, the ST's wide SPC56 MCU portfolio, including single- and dual-core architectures, with rich connectivity, will provide the most appropriate solution for any control or communication system.

Motorcycle Engine control

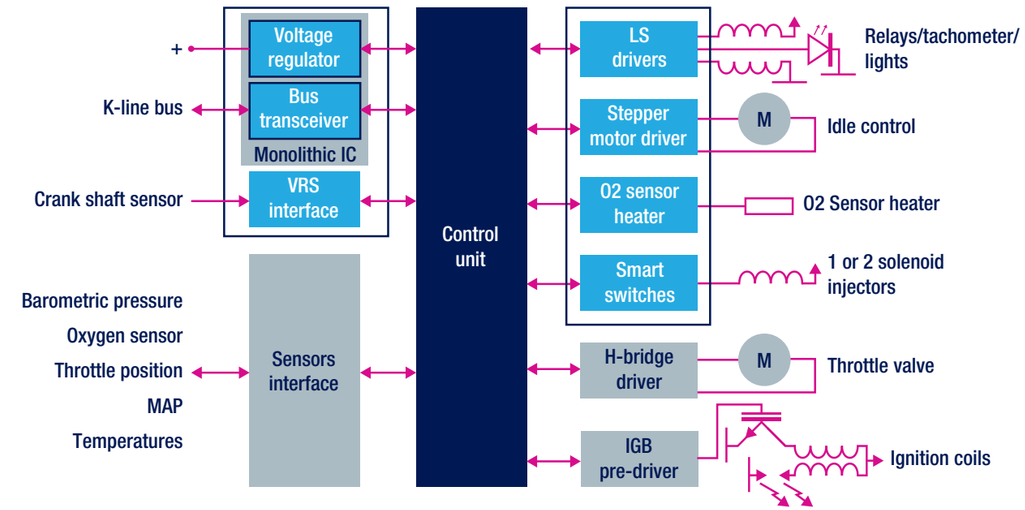

Governmental regulations, energy concerns and market requirements for very high performing motorcycle engines encouraged the development of enhanced gasoline engine control systems. ST, with a strong portfolio of advanced technologies, provides comprehensive solutions for motorcycle applications as shown in the example given in this block diagram.

SUGGESTED PRODUCTS

- **SPC56 A-Line, SPC56 M-Line:** 32-bit SP56 MCU family
- **L9758:** Multi-voltage regulator
- **L9637:** ISO9141 transceiver
- **L9733:** Octal configurable low-/high-side driver
- **L9826:** Octal low-side driver
- **L9942, L9935:** Stepper motor driver for bipolar motors
- **VBG08H:** Single channel driver, with IGBT power stage internally assembled using Chip-On-Chip (COC) hybrid technology
- **L9651:** Smart quad switch (Injectors)
- **L9959, L9960:** H-bridge Motor control
- **L9177:** ASP provide all basic function for standard engine management control units (voltage regulator, switches, pre-drivers, drivers)

Marine Engine management system

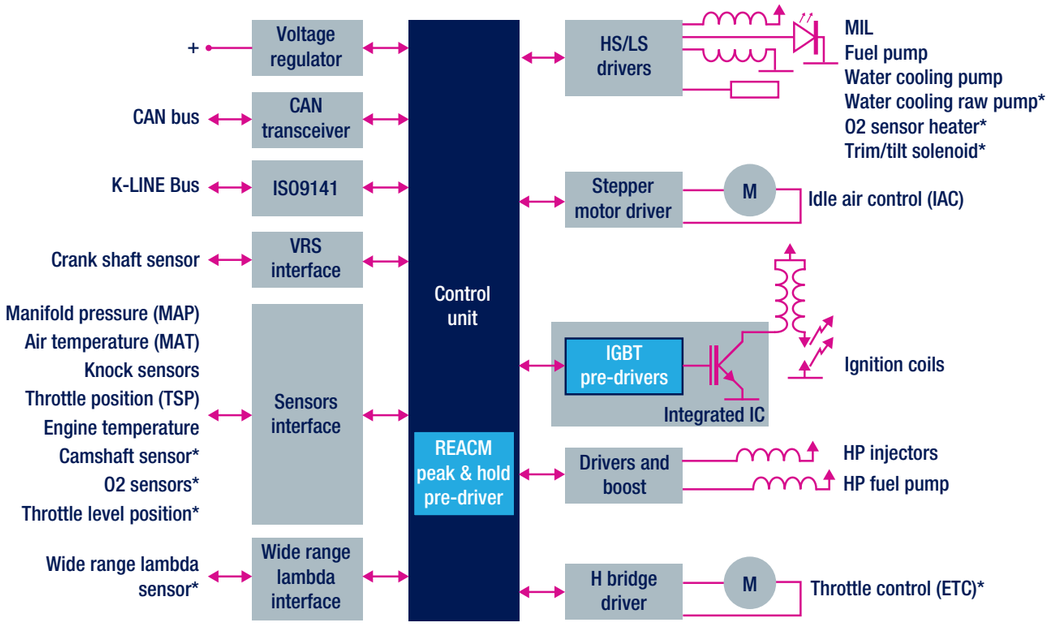

* If used

The emissions reduction required by the new legislation, enacted by the U.S. Environmental Protection Agency (EPA) and the California Air Resources Board (CARB) as well as EU Recreational Craft Directive, it has imposed a technologies change on marine engines. The electronic injection has been the key for more clean and efficient engines (especially for the two-stroke engines).

SUGGESTED PRODUCTS

- **SPC56 A-Line:** 32-bit SP56 MCU family
- **L9758:** Multi-voltage regulator
- **L9615, L9616:** Can bus transceiver
- **L9637:** ISO9141 transceiver
- **L9733:** Octal configurable low-/high-side driver
- **L9826:** Octal low-side driver
- **L9942, L9935:** Stepper motor driver for bipolar motors
- **VBG08H, VB525, VB526:** Single channel driver, with IGBT power stage internally assembled using Chip-On-Chip (COC) hybrid technology
- **L9780:** Wide range air fuel lambda sensor control interface
- **L9959, L9960, L9958:** H-bridge motor control

SPC56 Industrial

HIGH-PERFORMANCE, ENVIRONMENT-FRIENDLY SOLUTIONS

STMicroelectronics supports all kinds of transportation with sustainability in mind, constantly finding ways to reduce emission and fuel consumption, using cutting-edge electronics technologies to meet the most demanding requirements in terms of performance, safety and security.
Whether for leisure, commercial or industrial transportation, the ST's wide SPC56 MCU portfolio, including single- and dual-core architectures, with rich connectivity, will provide the most appropriate solution for any control or communication system.

Factory Automation – PLC

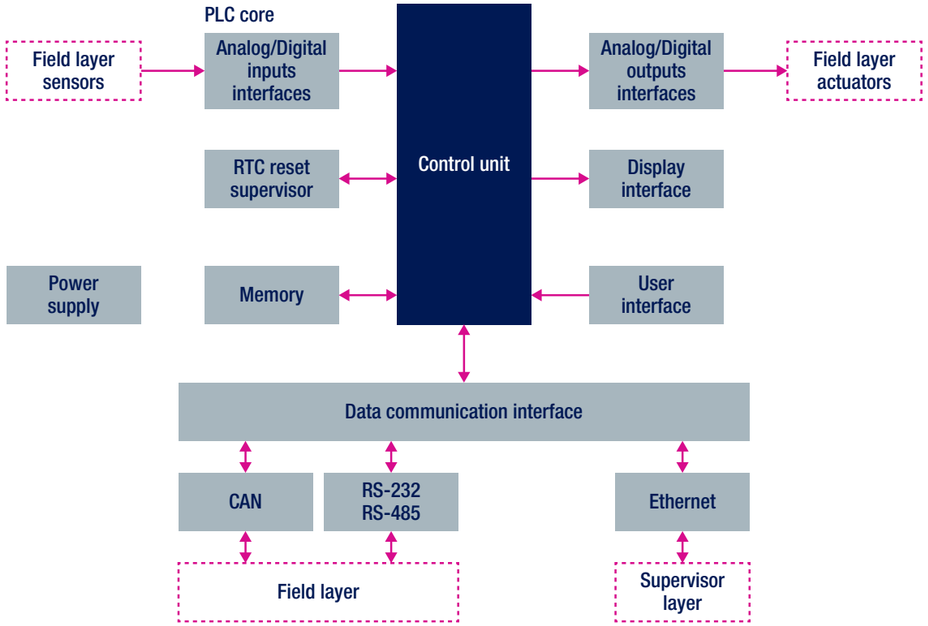

Factory automation is a highly demanding market in which safety, standardization and performance are recognized by customers as key assets. Probably the most important device representing factory automation is the PLC (Programmable Logic Controller).
Introduced in the late 1960s, PLCs are designed for the real-time processing of a large number of I/Os in industrial plants. What differentiate a PLC in the market are its I/O capacity (identified by the number of I/Os and related scan rate) and computational performances.
STMicroelectronics has a strong background in the industrial automation and process control market and is committed to long product life-cycles and high-end technology development. STMicroelectronics provides an extensive portfolio of technologies and devices to be used in factory automation systems, such as the SPC56 families.
Our comprehensive (hardware and software) system solutions are supported with development tools, evaluation boards and rich documentation.

SUGGESTED PRODUCTS

- **SPC56 A-Line, SPC56 M-Line, SPC56 P-Line, SPC56 B-Line, SPC56 L-Line:** 32-bit SP56 MCU family
- **VN808, VNI4140, VNI2140, IPS160:** Single-, double-, quad- and octal-channel high-side switches in parallel mode
- **IPS4260:** Quad-channel low-ide switches
- **VNI8200:** Octal-channel high-side switches in parallel & SPI mode
- **ISO8200:** Octal-channel high-side switches with on chip galvanic isolation
- **M0-5, M0-6, M0-7 family:** Single-, double- and quad-channel high-side switches (low R_{DS}(on))

Kinematics Control unit

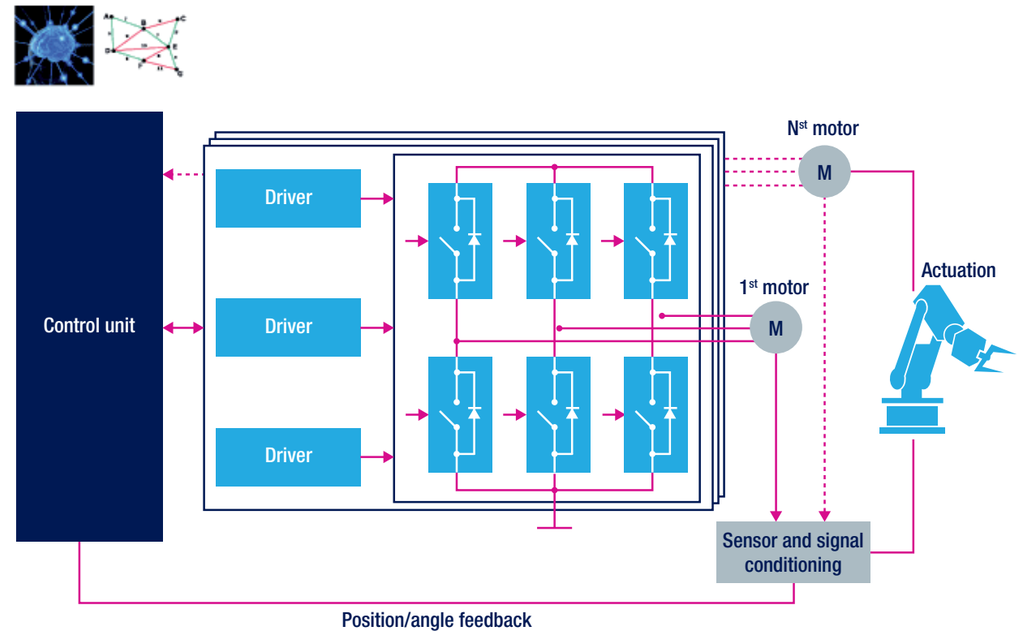

To build the best kinematics algorithms for a robot, it usually involves control engineering, computer science and electronics engineering skills and it is commonly recognized as the hardest task in designing robotics systems.

SUGGESTED PRODUCTS

- **SPC56 A-Line, SPC56 M-Line, SPC56 P-Line, SPC56 B-Line, SPC56 L-Line:** 32-bit SP56 MCU family
- **STSPIN family:** Fully integrated motor drivers ICs dedicated to motion control
- **STDRIVE family:** High-voltage (600 V) half-bridge drivers with added functionalities like comparators, Op Amps and smart shut-down
- **STGAP1S:** 4kV galvanically isolated driver with advanced protection, configuration and diagnostic features.
- **M0-5, M0-6, M0-7 family:** Single-, double- and quad-channel high-side switches (low R_{DS}(on))

DEVICE SUMMARY

	Part Number	Core	CPU Clock Frequency max (MHz)	Package	FLASH Size (Prog)	FLASH Size (Data)	Internal RAM Size	Serial Interface						Timed I/Os	A/D Channels	A/D Resolution	Cryptography	Number Of I/O Ports nom ()
								SPI	LIN	CAN	I²C	FlexRay	Ethernet					
D-Line	SPC560D30L1	e200z0	48	LQFP 64 10x10x1.4	128	64	12	2	3	1	-	-	-	14ch eMIOS (16-bit)	16	1x12-bit	-	45
	SPC560D30L3	e200z0	48	LQFP 100 14x14x1.4	128	64	12	2	3	1	-	-	-	28ch eMIOS (16-bit)	33	1x12-bit	-	79
	SPC560D40L1	e200z0	48	LQFP 64 10x10x1.4	256	64	16	2	3	1	-	-	-	14ch eMIOS (16-bit)	16	1x12-bit	-	45
	SPC560D40L3	e200z0	48	LQFP 100 14x14x1.4	256	64	16	2	3	1	-	-	-	28ch eMIOS (16-bit)	33	1x12-bit	-	79
B-Line	SPC560B40L1	e200z0	64	LQFP 64 10x10x1.4	256	64	24	2	3	2	1	-	-	12ch eMIOS (16-bit)	12	1x10-bit	-	45
	SPC560B40L3	e200z0	64	LQFP 100 14x14x1.4	256	64	24	3	3	2	1	-	-	28ch eMIOS (16-bit)	28	1x10-bit	-	79
	SPC560B40L5	e200z0	64	LQFP 144 20x20x1.4	256	64	24	3	3	2	1	-	-	56ch eMIOS (16-bit)	36	1x10-bit	-	123
	SPC560B50L1	e200z0	64	LQFP 64 10x10x1.4	512	64	32	2	4	3	1	-	-	12ch eMIOS (16-bit)	12	1x10-bit	-	45
	SPC560B50L3	e200z0	64	LQFP 100 14x14x1.4	512	64	32	3	4	3	1	-	-	28ch eMIOS (16-bit)	28	1x10-bit	-	79
	SPC560B50L5	e200z0	64	LQFP 144 20x20x1.4	512	64	32	3	4	3	1	-	-	56ch eMIOS (16-bit)	36	1x10-bit	-	123
	SPC560B54L3	e200z0	64	LQFP 100 14x14x1.4	768	64	64	3	4	6	1	-	-	37ch eMIOS (16-bit)	31	1x10-bit; 1x12-bit	-	77
	SPC560B54L5	e200z0	64	LQFP 144 20x20x1.4	768	64	64	5	8	6	1	-	-	64ch eMIOS (16-bit)	39	1x10-bit; 1x12-bit	-	121
	SPC560B60L3	e200z0	64	LQFP 100 14x14x1.4	1024	64	80	3	4	6	1	-	-	37ch eMIOS (16-bit)	31	1x10-bit; 1x12-bit	-	77
	SPC560B60L5	e200z0	64	LQFP 144 20x20x1.4	1024	64	80	5	8	6	1	-	-	64ch eMIOS (16-bit)	39	1x10-bit; 1x12-bit	-	121
	SPC560B60L7	e200z0	64	LQFP 176 24x24x1.4	1024	64	80	6	10	6	1	-	-	64ch eMIOS (16-bit)	53	1x10-bit; 1x12-bit	-	149
	SPC560B64L5	e200z0	64	LQFP 144 20x20x1.4	1536	64	96	5	8	6	1	-	-	64ch eMIOS (16-bit)	39	1x10-bit; 1x12-bit	-	121
	SPC560B64L7	e200z0	64	LQFP 176 24x24x1.4	1536	64	96	6	10	6	1	-	-	64ch eMIOS (16-bit)	56	1x10-bit; 1x12-bit	-	149
	RPC560B64L7	e200z0	64	LQFP 176 24x24x1.4	1536	64	96	6	10	6	1	-	-	64ch eMIOS (16-bit)	56	1x10-bit; 1x12-bit	-	149
	SPC564B64L7	e200z4d	120	LQFP 176 24x24x1.4	1536	64	128	8	10	6	1	1	-	64ch eMIOS (16-bit)	51	1x10-bit; 1x12-bit	CSE;SHE	147
	SPC564B64L8	e200z4d	120	LQFP 208 28x28x1.4	1536	64	128	8	10	6	1	1	-	64ch eMIOS (16-bit)	62	1x10-bit; 1x12-bit	CSE;SHE	177
	SPC564B70L7	e200z4d	120	LQFP 176 24x24x1.4	2048	64	160	8	10	6	1	1	-	64ch eMIOS (16-bit)	56	1x10-bit; 1x12-bit	CSE;SHE	147
	SPC564B70L8	e200z4d	120	LQFP 208 28x28x1.4	2048	64	160	8	10	6	1	1	-	64ch eMIOS (16-bit)	62	1x10-bit; 1x12-bit	CSE;SHE	177
	SPC564B74L7	e200z4d	120	LQFP 176 24x24x1.4	3072	64	192	8	10	6	1	1	-	64ch eMIOS (16-bit)	56	1x10-bit; 1x12-bit	CSE;SHE	147
	SPC564B74L8	e200z4d	120	LQFP 208 28x28x1.4	3072	64	192	8	10	6	1	1	-	64ch eMIOS (16-bit)	62	1x10-bit; 1x12-bit	CSE;SHE	177
C-Line	SPC560C40L1	e200z0	64	LQFP 64 10x10x1.4	256	64	32	2	4	5	1	-	-	12ch eMIOS (16-bit)	8	1x10-bit	-	45
	SPC560C40L3	e200z0	64	LQFP 100 14x14x1.4	256	64	32	3	4	6	1	-	-	28ch eMIOS (16-bit)	28	1x10-bit	-	79
	SPC560C50L1	e200z0	64	LQFP 64 10x10x1.4	512	64	48	2	4	5	1	-	-	12ch eMIOS (16-bit)	8	1x10-bit	-	45
	SPC560C50L3	e200z0	64	LQFP 100 14x14x1.4	512	64	48	3	4	6	1	-	-	28ch eMIOS (16-bit)	28	1x10-bit	-	79
	RPC560C50L3	e200z0	64	LQFP 100 14x14x1.4	512	64	48	3	4	6	1	-	-	28ch eMIOS (16-bit)	28	1x10-bit	-	79
	SPC56EC64B3	e200z4d / e200z0	120	LBGA256 17x17x1.7	1536	64	192	8	10	6	1	1	1	64ch eMIOS (16-bit)	62	1x10-bit; 1x12-bit	CSE;SHE	199
	SPC56EC64L7	e200z4d / e200z0	120	LQFP 176 24x24x1.4	1536	64	192	8	10	6	1	1	1	64ch eMIOS (16-bit)	51	1x10-bit; 1x12-bit	CSE;SHE	147
	SPC56EC64L8	e200z4d / e200z0	120	LQFP 208 28x28x1.4	1536	64	192	8	10	6	1	1	1	64ch eMIOS (16-bit)	62	1x10-bit; 1x12-bit	CSE;SHE	177
	SPC56EC70B3	e200z4d / e200z0	120	LBGA256 17x17x1.7	2048	64	256	8	10	6	1	1	1	64ch eMIOS (16-bit)	62	1x10-bit; 1x12-bit	CSE;SHE	199
	SPC56EC70L7	e200z4d / e200z0	120	LQFP 176 24x24x1.4	2048	64	256	8	10	6	1	1	1	64ch eMIOS (16-bit)	51	1x10-bit; 1x12-bit	CSE;SHE	147
	SPC56EC70L8	e200z4d / e200z0	120	LQFP 208 28x28x1.4	2048	64	256	8	10	6	1	1	1	64ch eMIOS (16-bit)	62	1x10-bit; 1x12-bit	CSE;SHE	177
	SPC56EC74B3	e200z4d / e200z0	120	LBGA256 17x17x1.7	3072	64	256	8	10	6	1	1	1	64ch eMIOS (16-bit)	62	1x10-bit; 1x12-bit	CSE;SHE	199
	SPC56EC74L7	e200z4d / e200z0	120	LQFP 176 24x24x1.4	3072	64	256	8	10	6	1	1	1	64ch eMIOS (16-bit)	51	1x10-bit; 1x12-bit	CSE;SHE	147
	SPC56EC74L8	e200z4d / e200z0	120	LQFP 208 28x28x1.4	3072	64	256	8	10	6	1	1	1	64ch eMIOS (16-bit)	62	1x10-bit; 1x12-bit	CSE;SHE	177
	RPC56EC74L8	e200z4d / e200z0	120	LQFP 208 28x28x1.4	3072	64	256	8	10	6	1	1	1	64ch eMIOS (16-bit)	62	1x10-bit; 1x12-bit	CSE;SHE	177
	SPC564B64L7	e200z4d	120	LQFP 176 24x24x1.4	1536	64	128	8	10	6	1	1	-	64ch eMIOS (16-bit)	51	1x10-bit; 1x12-bit	CSE;SHE	45
	SPC564B64L8	e200z4d	120	LQFP 208 28x28x1.4	1536	64	128	8	10	6	1	1	-	64ch eMIOS (16-bit)	62	1x10-bit; 1x12-bit	CSE;SHE	79
	SPC564B70L7	e200z4d	120	LQFP 176 24x24x1.4	2048	64	160	8	10	6	1	1	-	64ch eMIOS (16-bit)	56	1x10-bit; 1x12-bit	CSE;SHE	45
	SPC564B70L8	e200z4d	120	LQFP 208 28x28x1.4	2048	64	160	8	10	6	1	1	-	64ch eMIOS (16-bit)	62	1x10-bit; 1x12-bit	CSE;SHE	79
	SPC564B74L7	e200z4d	120	LQFP 176 24x24x1.4	3072	64	192	8	10	6	1	1	-	64ch eMIOS (16-bit)	56	1x10-bit; 1x12-bit	CSE;SHE	45
	SPC564B74L8	e200z4d	120	LQFP 208 28x28x1.4	3072	64	192	8	10	6	1	1	-	64ch eMIOS (16-bit)	62	1x10-bit; 1x12-bit	CSE;SHE	79

	Part Number	Core	CPU Clock Frequency max (MHz)	Package	FLASH Size (Prog)	FLASH Size (Data)	Internal RAM Size	Serial Interface						Timed I/Os	A/D Channels	A/D Resolution	Cryptography	Number Of I/O Ports nom ()
								SPI	LIN	CAN	I²C	FlexRay	Ethernet					
P-Line	SPC560P34L1	e200z0	64	LQFP 64 10x10x1.4	192	64	12	2	2	1	-	-	-	6ch eTimer (16-bit); 8ch FlexPWM (16-bit)	12	1x10-bit	-	37
	SPC560P34L3	e200z0	64	LQFP 100 14x14x1.4	192	64	12	2	2	1	-	-	-	6ch eTimer (16-bit); 8ch FlexPWM (16-bit)	16	1x10-bit	-	64
	SPC560P40L1	e200z0	64	LQFP 64 10x10x1.4	256	64	20	3	2	2	-	-	-	6ch eTimer (16-bit); 8ch FlexPWM (16-bit)	12	1x10-bit	-	37
	SPC560P40L3	e200z0	64	LQFP 100 14x14x1.4	256	64	20	3	2	2	-	-	-	6ch eTimer (16-bit); 8ch FlexPWM (16-bit)	16	1x10-bit	-	64
	SPC560P44L3	e200z0	64	LQFP 100 14x14x1.4	384	64	36	4	2	2	-	1	-	12ch eTimer (16-bit); 8ch FlexPWM (16-bit)	16	2x10-bit	-	67
	SPC560P44L5	e200z0	64	LQFP 144 20x20x1.4	384	64	36	4	2	2	-	1	-	12ch eTimer (16-bit); 8ch FlexPWM (16-bit)	26	2x10-bit	-	106
	SPC560P50L3	e200z0	64	LQFP 100 14x14x1.4	512	64	40	4	2	2	-	1	-	12ch eTimer (16-bit); 8ch FlexPWM (16-bit)	16	2x10-bit	-	67
	SPC560P50L5	e200z0	64	LQFP 144 20x20x1.4	512	64	40	4	2	2	-	1	-	12ch eTimer (16-bit); 8ch FlexPWM (16-bit)	26	2x10-bit	-	106
	SPC560P54L3	e200z0	64	LQFP 100 14x14x1.4	768	64	64	5	2	3	-	1	-	12ch eTimer (16-bit)	16	1x10-bit	-	65
	SPC560P54L5	e200z0	64	LQFP 144 20x20x1.4	768	64	64	5	2	3	-	1	-	12ch eTimer (16-bit)	26	1x10-bit	-	106
	SPC560P60L3	e200z0	64	LQFP 100 14x14x1.4	1024	64	80	5	2	3	-	1	-	12ch eTimer (16-bit)	16	1x10-bit	-	65
	SPC560P60L5	e200z0	64	LQFP 144 20x20x1.4	1024	64	80	5	2	3	-	1	-	12ch eTimer (16-bit)	26	1x10-bit	-	106
	SPC56AP54L3	Dual e200z0	64	LQFP 100 14x14x1.4	768	64	64	5	2	3	-	1	-	12ch eTimer (16-bit)	16	1x10-bit	-	65
	SPC56AP54L5	Dual e200z0	64	LQFP 144 20x20x1.4	768	64	64	5	2	3	-	1	-	12ch eTimer (16-bit)	26	1x10-bit	-	106
	SPC56AP60L3	Dual e200z0	64	LQFP 100 14x14x1.4	1024	64	80	5	2	3	-	1	-	12ch eTimer (16-bit)	16	1x10-bit	-	65
	SPC56AP60L5	Dual e200z0	64	LQFP 144 20x20x1.4	1024	64	80	5	2	3	-	1	-	12ch eTimer (16-bit)	26	1x10-bit	-	106
	RPC56AP60L5	Dual e200z0	64	LQFP 144 20x20x1.4	1024	64	80	5	2	3	-	1	-	12ch eTimer (16-bit)	26	1x10-bit	-	106
L-Line	SPC564L54L3	e200z4d	120	LQFP 100 14x14x1.4	768	-	96	3	2	2	-	1	-	18ch eTimer (16-bit); 8ch FlexPWM (16-bit)	11	2x12-bit	-	57
	SPC564L54L5	e200z4d	120	LQFP 144 20x20x1.4	768	-	96	3	2	2	-	1	-	18ch eTimer (16-bit); 8ch FlexPWM (16-bit)	22	2x12-bit	-	96
	SPC564L60L3	e200z4d	120	LQFP 100 14x14x1.4	1024	-	128	3	2	2	-	1	-	18ch eTimer (16-bit); 8ch FlexPWM (16-bit)	11	2x12-bit	-	57
	SPC564L60L5	e200z4d	120	LQFP 144 20x20x1.4	1024	-	128	3	2	2	-	1	-	18ch eTimer (16-bit); 8ch FlexPWM (16-bit)	22	2x12-bit	-	96
	SPC564L70L3	e200z4d	120	LQFP 100 14x14x1.4	2048	-	192	3	2	3	-	1	-	18ch eTimer (16-bit); 8ch FlexPWM (16-bit)	11	2x12-bit	-	57
	SPC564L70L5	e200z4d	120	LQFP 144 20x20x1.4	2048	-	192	3	2	3	-	1	-	18ch eTimer (16-bit); 8ch FlexPWM (16-bit)	22	2x12-bit	-	96
	SPC56EL54L3	Dual e200z4d	120	LQFP 100 14x14x1.4	768	-	96	3	2	2	-	1	-	18ch eTimer (16-bit); 8ch FlexPWM (16-bit)	11	2x12-bit	-	57
	SPC56EL54L5	Dual e200z4d	120	LQFP 144 20x20x1.4	768	-	96	3	2	2	-	1	-	18ch eTimer (16-bit); 8ch FlexPWM (16-bit)	22	2x10-bit	-	96
	SPC56EL60L3	Dual e200z4d	120	LQFP 100 14x14x1.4	1024	-	128	3	2	2	-	1	-	18ch eTimer (16-bit); 8ch FlexPWM (16-bit)	11	2x12-bit	-	57
	SPC56EL60L5	Dual e200z4d	120	LQFP 144 20x20x1.4	1024	-	128	3	2	2	-	1	-	18ch eTimer (16-bit); 8ch FlexPWM (16-bit)	22	2x12-bit	-	96
	RPC56EL60L5	Dual e200z4d	120	LQFP 144 20x20x1.4	1024	-	128	3	2	2	-	1	-	18ch eTimer (16-bit); 8ch FlexPWM (16-bit)	22	2x12-bit	-	96
	SPC56EL70L3	Dual e200z4d	120	LQFP 100 14x14x1.4	2048	-	192	3	2	3	-	1	-	18ch eTimer (16-bit); 8ch FlexPWM (16-bit)	11	2x12-bit	-	57
	RPC56EL70L3	Dual e200z4d	120	LQFP 100 14x14x1.4	2048	-	192	3	2	3	-	1	-	18ch eTimer (16-bit); 8ch FlexPWM (16-bit)	11	2x12-bit	-	57
	SPC56EL70L5	Dual e200z4d	120	LQFP 144 20x20x1.4	2048	-	192	3	2	3	-	1	-	18ch eTimer (16-bit); 8ch FlexPWM (16-bit)	22	2x12-bit	-	96
	RPC56EL70L5	Dual e200z4d	120	LQFP 144 20x20x1.4	2048	-	192	3	2	3	-	1	-	18ch eTimer (16-bit); 8ch FlexPWM (16-bit)	22	2x12-bit	-	96
M-Line	SPC563M64L5	e200z3	80	LQFP 144 20x20x1.4	1536	-	94	2	2	-	-	-	-	16ch eMIOS (24-bit); 32ch eTPU (24-bit)	32	2x12-bit	-	105
	SPC563M64L7	e200z3	80	LQFP 176 24x24x1.4	1536	-	94	2	2	-	-	-	-	16ch eMIOS (24-bit); 32ch eTPU (24-bit)	34	2x12-bit	-	114
A-Line	SPC564A70B4	e200z4d	150	PBGA 324 23x23x1.82	2048	-	128	3	3	3	-	1	-	24ch eMIOS (24-bit); 32ch eTPU (24-bit)	40	2x12-bit	-	150
	SPC564A70L7	e200z4d	150	LQFP 176 24x24x1.4	2048	-	128	3	3	3	-	1	-	24ch eMIOS (24-bit); 32ch eTPU (24-bit)	34	2x12-bit	-	150
	RPC564A70L7	e200z4d	150	LQFP 176 24x24x1.4	2048	-	128	3	3	3	-	1	-	24ch eMIOS (24-bit); 32ch eTPU (24-bit)	34	2x12-bit	-	150
	SPC564A74B4	e200z4d	150	PBGA 324 23x23x1.82	3072	-	160	3	3	3	-	1	-	24ch eMIOS (24-bit); 32ch eTPU (24-bit)	40	2x12-bit	-	190
	SPC564A74L7	e200z4d	150	LQFP 176 24x24x1.4	3072	-	160	3	3	3	-	1	-	24ch eMIOS (24-bit); 32ch eTPU (24-bit)	34	2x12-bit	-	118
	SPC564A80B4	e200z4d	150	PBGA 324 23x23x1.82	4096	-	192	3	3	3	-	1	-	24ch eMIOS (24-bit); 32ch eTPU (24-bit)	40	2x12-bit	-	190
	SPC564A80L7	e200z4d	150	LQFP 176 24x24x1.4	4096	-	192	3	3	3	-	1	-	24ch eMIOS (24-bit); 32ch eTPU (24-bit)	34	2x12-bit	-	118
	RPC564A80L7	e200z4d	150	LQFP 176 24x24x1.4	4096	-	192	3	3	3	-	1	-	24ch eMIOS (24-bit); 32ch eTPU (24-bit)	34	2x12-bit	-	118

ORDERING INFORMATION

SPC 56 0 B 50 L3 C XXX/XX Y

Family

Core
- **0:** e200z0
- **3:** e200z3
- **4:** e200z4
- **A:** e200z0 dc
- **E:** e200z4 dc

Line
- **M:** M-Line
- **P:** P-Line
- **B:** B-Line
- **A:** A-Line
- **L:** L-Line
- **C:** C-Line
- **D:** D-Line

Memory Size
- 30……128kByte
- 34……192kByte
- 40……256kByte
- 44……384kByte
- 50……512kByte
- 54……768kByte
- 60……1MByte
- 64……1.5MByte
- 70……2MByte
- 74……3MByte
- 80……4MByte

Package
- **L1:** LQFP64
- **L3:** LQFP100
- **L5:** LQFP144
- **L7:** LQFP176
- **L8:** LQFP208
- **B3:** LBGA256
- **B4:** PBGA324

Temperature
Temp Rang
- B: -40 … 105°C
- C: -40 … 125°C

Custom version
Line Dependent

Conditioning
- Y: Tray
- R: Tape&Reel
- X: Tape&Reel 90°

Custom Version

P-Line: X1X2X3			D,B & C-Lines : X1X2X3			A-Line: X1X2		M-Line : X1X2		L-Line X1X2X3		
X1	X2	X3	X1	X2	X3	X1	X2	X1	X2.	X1	X2	X3
E: On Chip Data Flash 0: No Data flash	F: Full Featured A: Airbag	A: 5V, 64MHz B: 3.3V, 64MHz C: 5V, 40MHz D: 3.3V, 40MHz	3: 32MHz 4: 48MHz 6: 64MHz 8: 80MHz 9: 120MHz	E: On Chip Data Flash	0: no option E: Ethernet C: Ethernet+ CSE	F: FlexRay O: No FlexRay	A: 150Mhz B: 120Mhz C: 80Mhz	O: Standard	A: 80Mhz B: 64Mhz	B: 120MHz C: 80MHz	F: FlexRay O: No FlexRay	Q: Quality management safety level S: ASILD/SIL3

HARDWARE TOOLS SUMMARY

	Part number	Description	Supported devices
Discovery Kits	SPC560B-DIS	SPC56B-Discovery with SPC560B54L5	SPC56 B-Line
	SPC560D-DIS	SPC56D-Discovery with SPC560D40L1	SPC56 D-Line
	SPC564A-DISP	Discovery Kit for the A Line. Includes one evaluation board with SPC564A.	SPC56 A-Line
	SPC563M-DISP	Discovery Kit for the M Line. Includes one evaluation board with SPC563M.	SPC56 M-Line
	SPC560P-DISP	SPC56P-Discovery+ with SPC560P50L5	SPC56 P-Line
	SPC56EL70L5DISP	Discovery Kit for the L Line. Includes one evaluation board with SPC56EL60L5.	SPC56 L-Line
Connect	SPC5-CONNECT	SPC5 Programmable communication interface. USB based hardware for PC, supports CAN, SCI, ADC and GPIO.	SPC56 family
Debugger	SPC5-UDEDEBG	UDE Starter Kit version for SPC5 family of automotive microcontrollers.	SPC5x family
	SPC5-UDEDEBG-TL	UDE Starter Kit version for SPC5 family of automotive microcontrollers, one year license and maintenance.	SPC5x family
	SPC5-UDESTK-EVAL	USB/JTAG Debug interface for SPC5 family of automotive microcontrollers. Evaluation version.	SPC5x family
	SPC5-UDESTK-PLUS	USB/JTAG Debug interface for SPC5 family of automotive microcontrollers. Include a perpetual, full-feature, unlimited code size license.	SPC5x family
	SPC5-UDESTK-FULL	USB/JTAG Debug interface for SPC5 family of automotive microcontrollers. Includes 1 year license.	SPC5x family
Premium Evaluation boards	SPC56XXMB	Motherboard for all SPC56x microcontrollers. Includes: universal power supply, USB cable, documentation CD.	SPC56 family
	SPC560B64A100S	Socketed mini module for B-Line, C-Line and D-Line in LQFP100 package. Requires SPC56XXMB.	SPC560B40L3, SPC560B50L3, SPC560B54L3, SPC560B60L3, SPC560C40L3, SPC560C50L3, SPC560D30L3, SPC560D40L3
	SPC560BADPT144S	Socketed mini module for B-Line in LQFP144 package. Requires SPC56XXMB.	SPC560B40L5, SPC560B50L5, SPC560B54L5, SPC560B60L5, SPC560B64L5
	SPC560BADPT208S	Socketed mini module for B-Line 512K in BGA208 package. Requires SPC56XXMB.	SPC560B50B2
	SPC560B64A208S	Socketed mini module for B-Line in BGA208 package. Requires SPC56XXMB.	SPC560B50B2, SPC560B64B2
	SPC560BADPT176S	Socketed mini module for B-Line in LQFP176 package. Requires SPC56XXMB.	SPC560B64L7
	SPC560BADPT64S	Socketed mini module for B-Line in LQFP64 package. Requires SPC56XXMB.	SPC560D30L1, SPC560D40L1
	SPC56EC74A208QS	Socketed mini module for B-Line 3M in BGA208 package. Requires SPC56XXMB.	SPC56EC74B1
	SPC56EC74A256S	Socketed mini module for B-Line 3M in BGA256 package. Requires SPC56XXMB.	SPC56EC74B3
	SPC56EC74A176S	Socketed mini module for B-Line 3M in LQFP176 package. Requires SPC56XXMB.	SPC56EC74L7
	SPC560PADPT64S	Socketed mini module for P-Line in LQFP64 package. Requires SPC56XXMB.	SPC560P34L1, SPC560P40L1, SPC560P50L1
	SPC560PADPT100S	Socketed mini module for P-Line single and dal core in LQFP100 package. Requires SPC56XXMB.	SPC560P34L3, SPC560P40L3, SPC560P44L3, SPC560P50L3, SPC560P60L3, SPC56AP54L3, SPC56AP60L3
	SPC560PADPT144S	Socketed mini module for P-Line single and dal core in LQFP144 package. Requires SPC56XXMB.	SPC560P50L5, SPC560P60L5, SPC56AP60L5
	SPC560PADPT176S	Socketed mini module for P-Line dual core in LQFP176 package. Requires SPC56XXMB.	SPC56AP60L7
	SPC563MADPT208S	Socketed mini module for M-Line in BGA208 package. Requires SPC56XXMB.	SPC563M60B2, SPC563M64B2
	SPC563MADPT144S	Socketed mini module for M-Line in LQFP144 package. Requires SPC56XXMB.	SPC563M60L5
	SPC563M64A176S	Socketed mini module for M-Line and A-Line in LQFP176 package. Requires SPC56XXMB.	SPC563M60L7, SPC563M64L7, SPC564A80L7, SPC564A70L7
	SPC563MADPT176S	Socketed mini module for M-Line and A-Line in LQFP176 package. Requires SPC56XXMB.	SPC563M60L7, SPC563M64L7, SPC564A80L7, SPC564A70L7
	SPC564AADPT208S	Socketed mini module for A-Line in BGA208 package. Requires SPC56XXMB.	SPC564A80B2
	SPC564AADPT324S	Socketed mini module for A-Line in BGA324 package. Requires SPC56XXMB.	SPC564A70B4, SPC564A74B4, SPC564A80B4
	SPC56ELADPT100S	Socketed mini module for L-Line in LQFP100 package. Requires SPC56XXMB.	SPC56EL54L3, SPC56EL60L3, SPC56EL70L3
	SPC56ELADPT144S	Socketed mini module for L-Line in LQFP144 package. Requires SPC56XXMB.	SPC56EL60L5, SPC56EL54L5, SPC56EL70L5

NOTES

life.augmented

MIX
Paper from responsible sources
FSC® C003379
www.fsc.org

© STMicroelectronics - July 2015 - Printed in United Kingdom - All rights reserved
The STMicroelectronics corporate logo is a registered trademark of the STMicroelectronics group of companies
All other names are the property of their respective owners

Order code: BRSPC560715

For more information on ST products and solutions, visit www.st.com